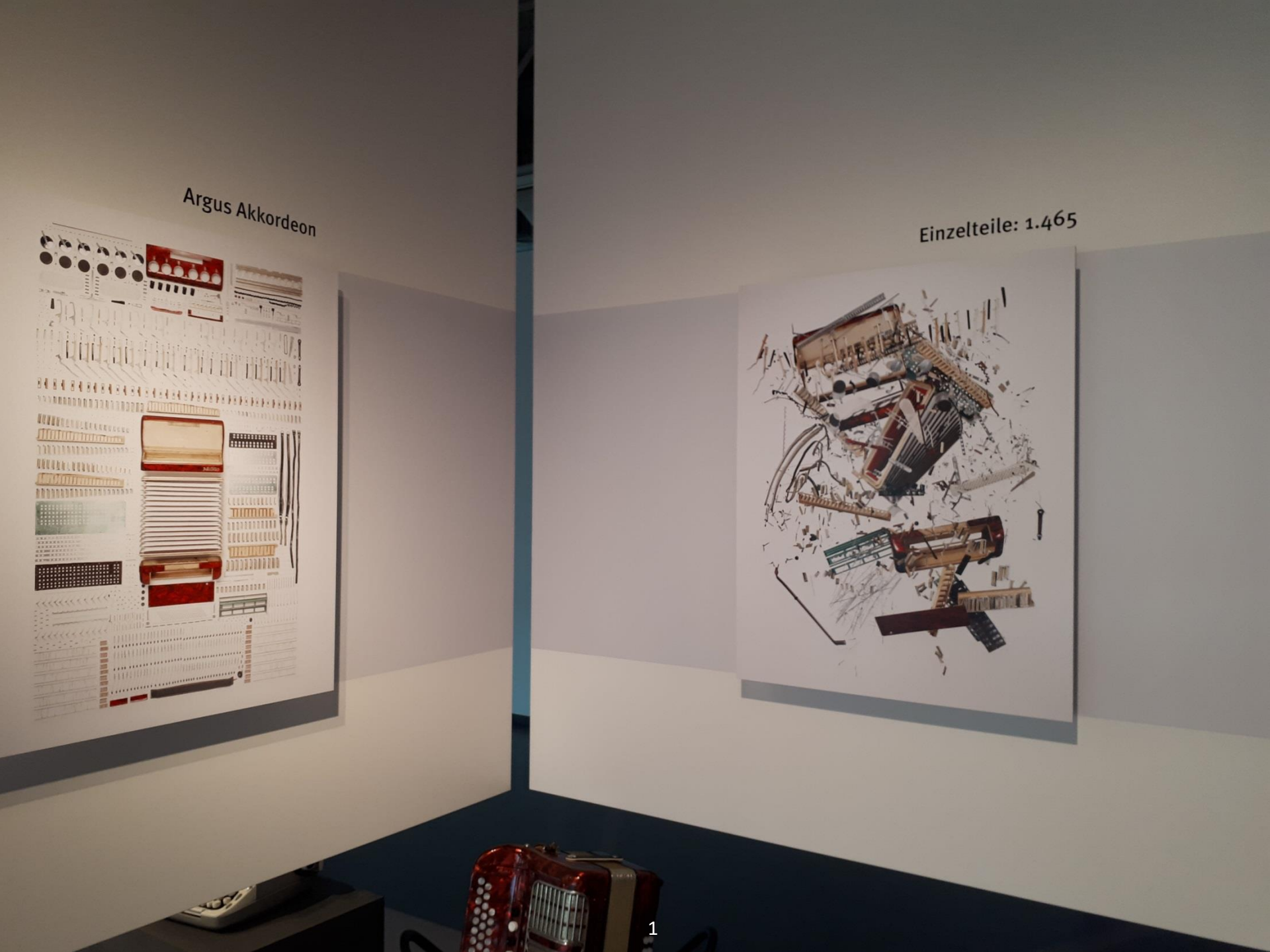
Argus Akkordeon
Einzelteile: 1.465


Apple Macintosh
Computer
Einzelteile: 928

Component Design

Systems Engineering BSc Course

Budapest University of Technology and Economics
Department of Measurement and Information Systems

Platform-based systems design

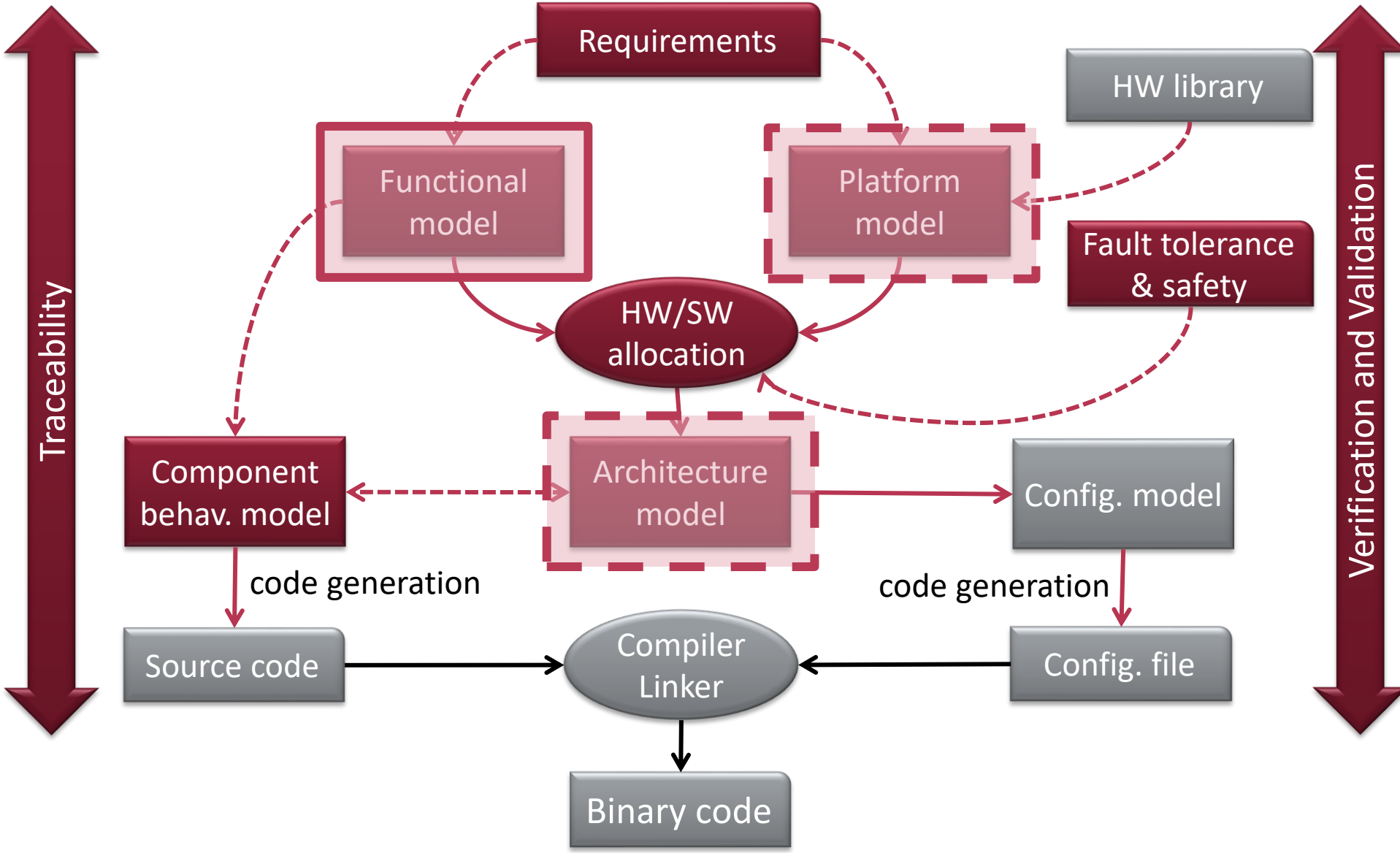

Learning Objectives

Structural modeling

Understand the **basic notions** of structural modeling in systems engineering
Understand the role and major **challenges of designing functional architecture**
Understand **top-down and bottom-up** approaches and when to use them

Blocks as reusable components

- Identify the functional components
- Identify the hierarchical relations between components
- Capture components using the SysML language
- Traceability of functional components
- Modeling component variants and specific instances

Internal structure of blocks

- Identify the communication aspects between components
- Understand the concepts of standard ports and flow ports

Structural Modeling Basics

(As you may recall from the **System Modeling** course…)

- A **Structural Model** is concerned with:
  - which elements form the system,
  - how they are connected/related to each other,
    - especially part-whole relationships (not necessarily physical)
  - and the properties these elements have.
- Examples from information technology
  - Data structures
  - SW components, microservices
  - Network structure
  - SW components running on HW platform

Structural Modeling Basics

(As you may recall from the **System Modeling** course…)

- A **composite (sub)system** contains elements…
  - …arranged in a specific way…
  - …to attain a goal…
  - …that the individual parts cannot satisfy on their own
- Engineering processes that build structural models
  - **Composition**: building a complex solution from an appropriate arrangement of simpler elements
  - **Decomposition** or **factoring**: breaking up a complex problem or system into simpler parts

Top-down and bottom-up design

- Top-down: using decomposition
  - ☺ When designing a subsystem, its goal is already known
  - ☹ There are no working parts during development
  - ☹ Problems, needs of subsystems revealed late
- Bottom-up: using composition
  - ☺ Subsystems can be tested one-by-one
  - ☺ There are always some working parts during development
  - ☹ Exact roles of the subsystems are revealed late
- (Not only in structural modeling…)
- Meet-in-the-middle approach
- Iterative approaches

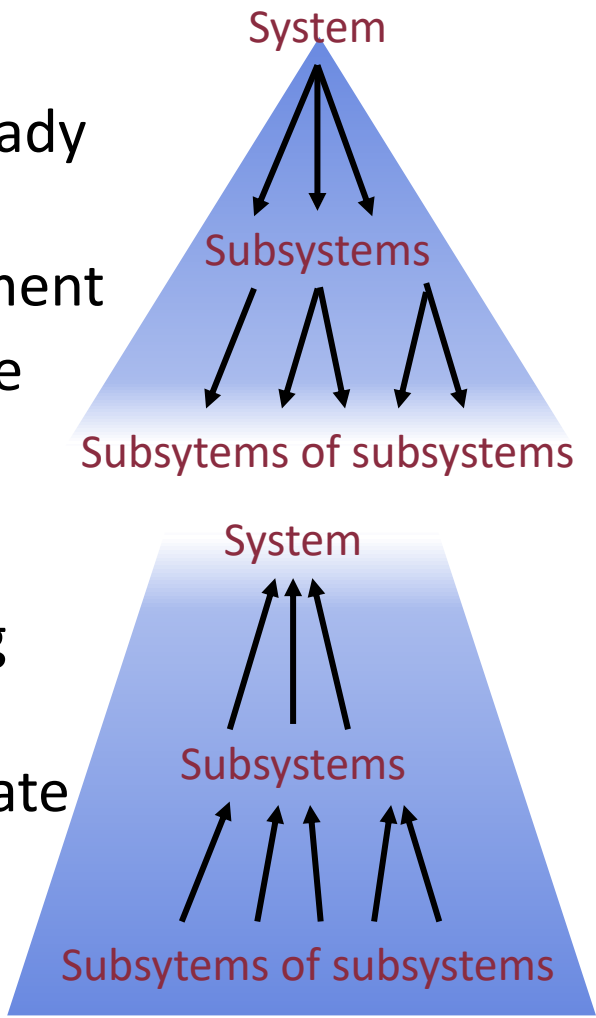

SW versus HW Modeling

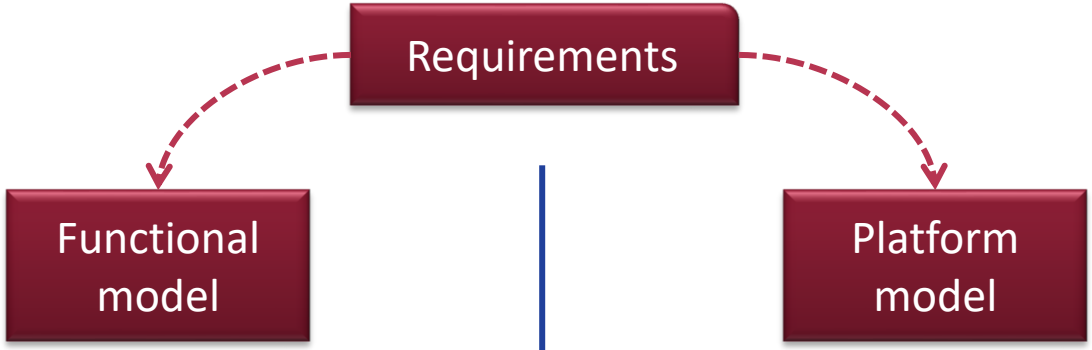

Most common:

Top-down approach

1. High-level components first
2. Refine them to smaller units
3. Design connections & API

Why top-down?

Most common:

Bottom-up approach

1. HW component library
2. Compose them into larger components
3. Model how they are connected

Why bottom-up?

Top-Down Structural Modeling

Iteratively breaking down
complex problems into simpler ones

Graphical User Interface

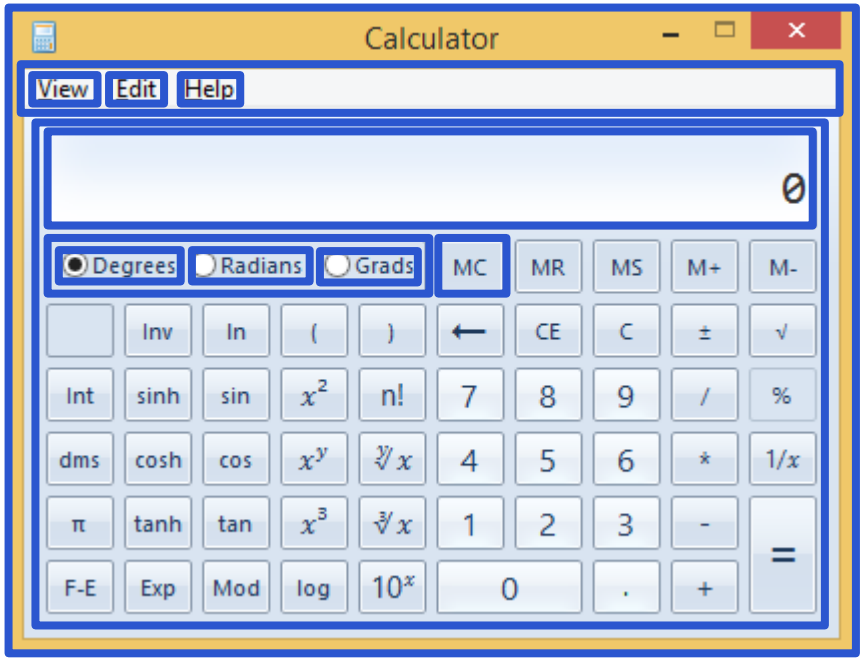

- Top-down design

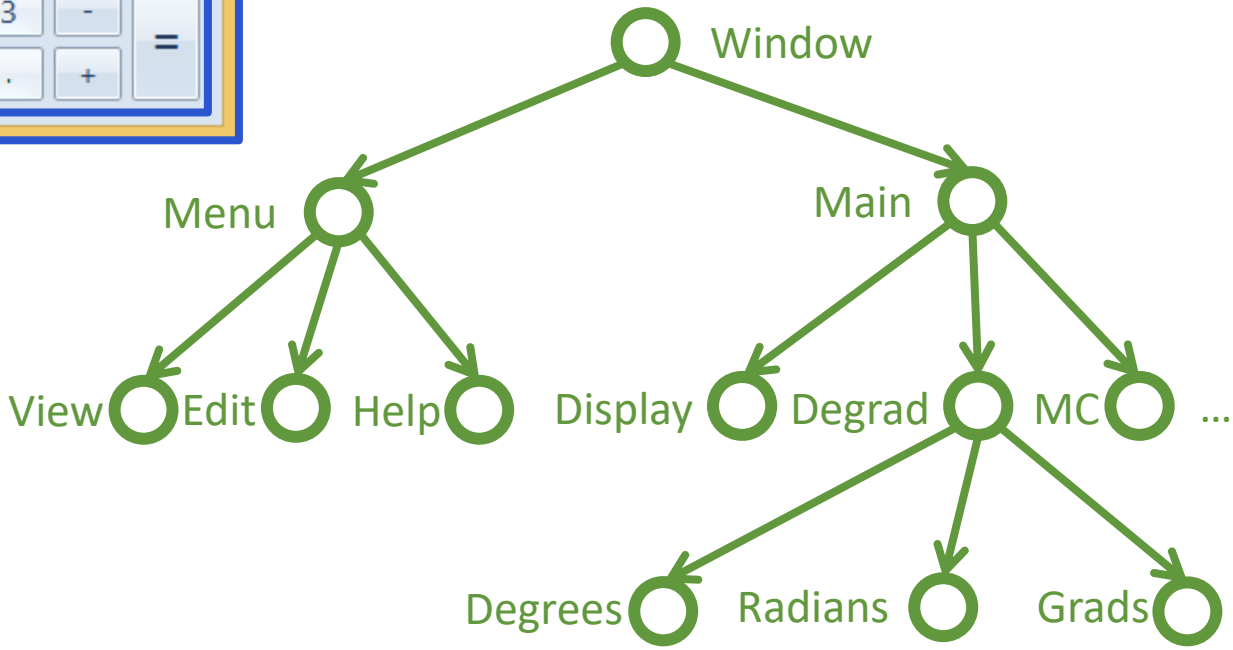

Embedded System

- **Decomposition** or **factoring:** breaking up a complex problem or system into simpler parts
- Logical decomposition by function (vs. physical)
  - „by function”: what service is provided?

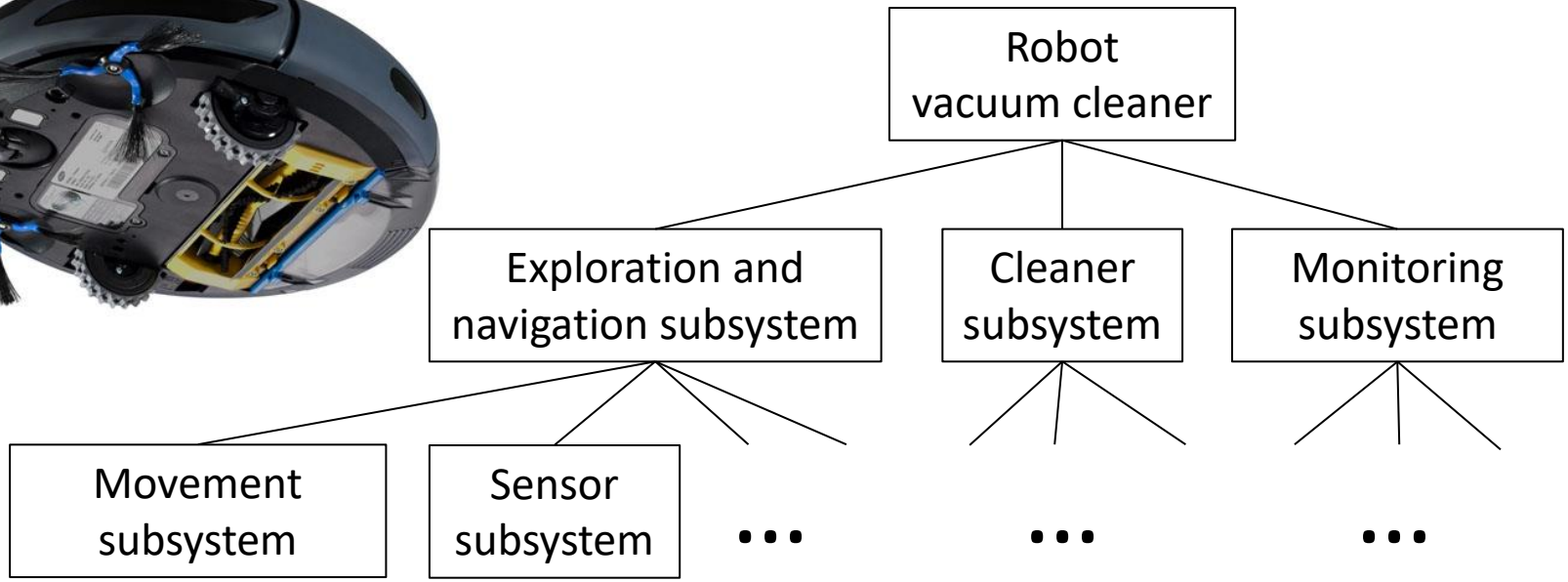

Bottom-Up Structural Modeling

Modeling complex systems
as composites of reusable parts

Composition

- **Composition**: building a complex solution from an appropriate arrangement of more simple elements
- A **composite (sub)system** contains elements…
  - …arranged in a specific way…
  - …to attain a goal…
  - …that the individual parts cannot satisfy on their own

Software Development by Design Patterns

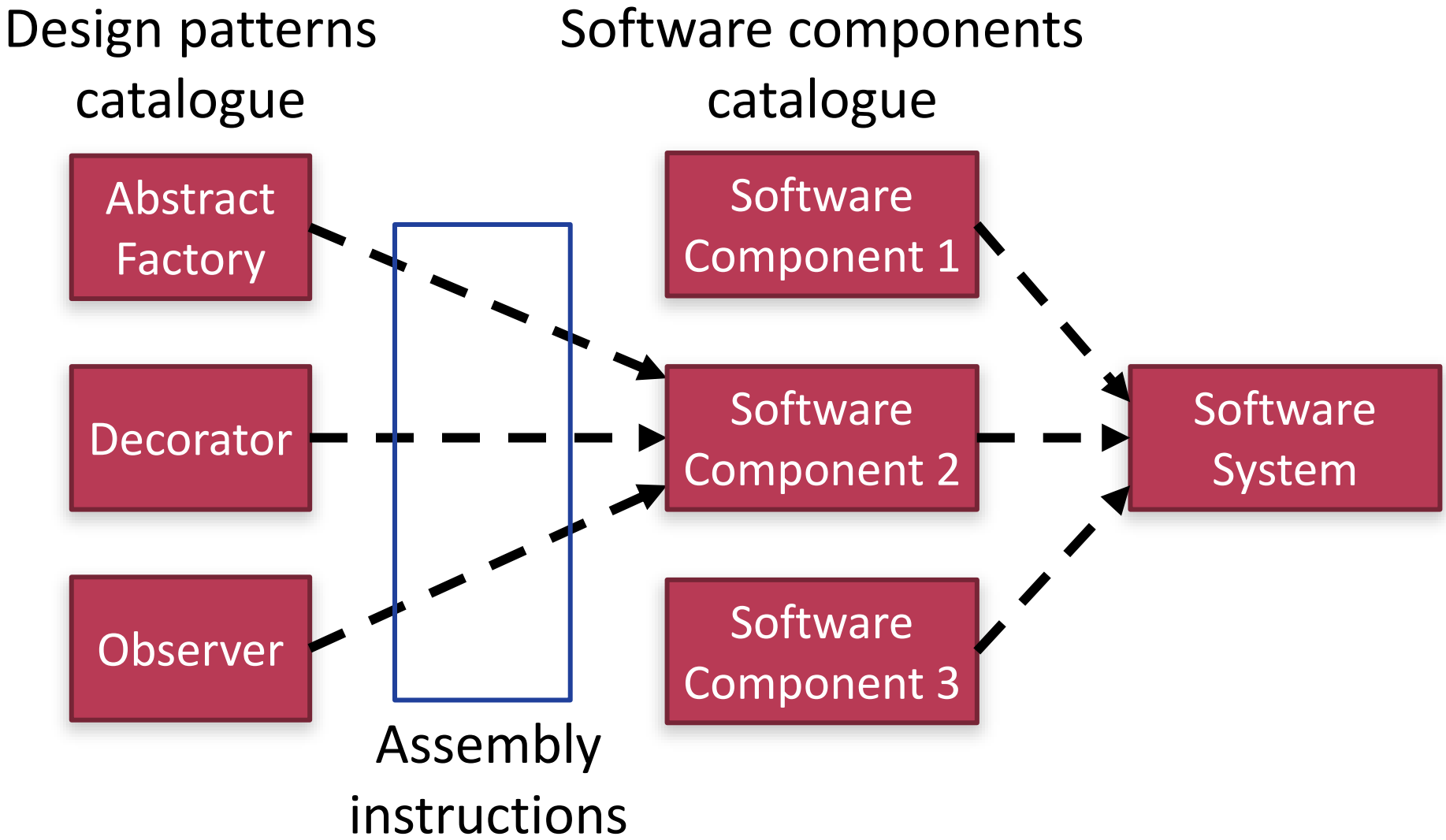

Structural Modeling Roots

- Rich history in a variety of engineering domains
  - Mechanical / hydraulic / chemical / etc.
  - Software and hardware systems
  - **Hybrid systems**

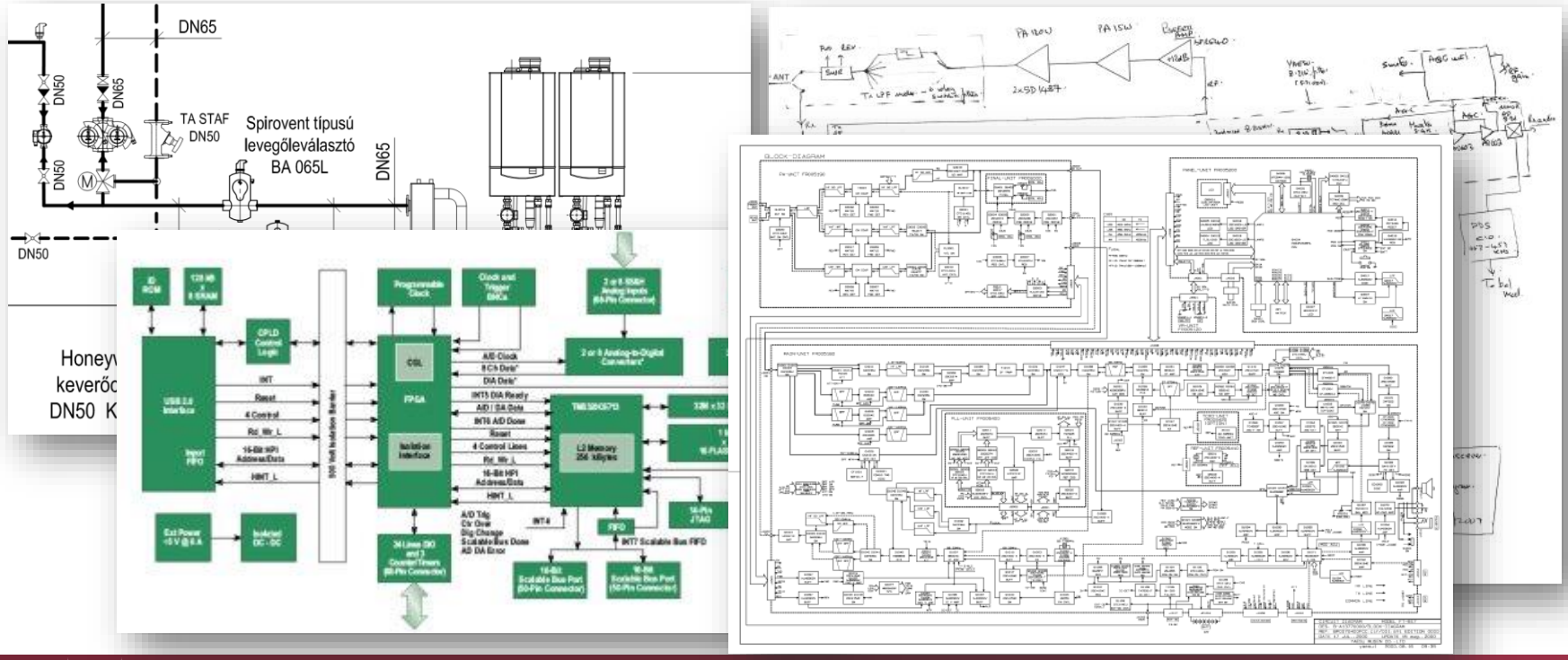

Structural Modeling Roots

- Composition from *building blocks…*
  - …by hand or with CAD tools (e.g. Matlab Simulink)
  - **Block**: reusable component/subsystem with **properties** and **connections**

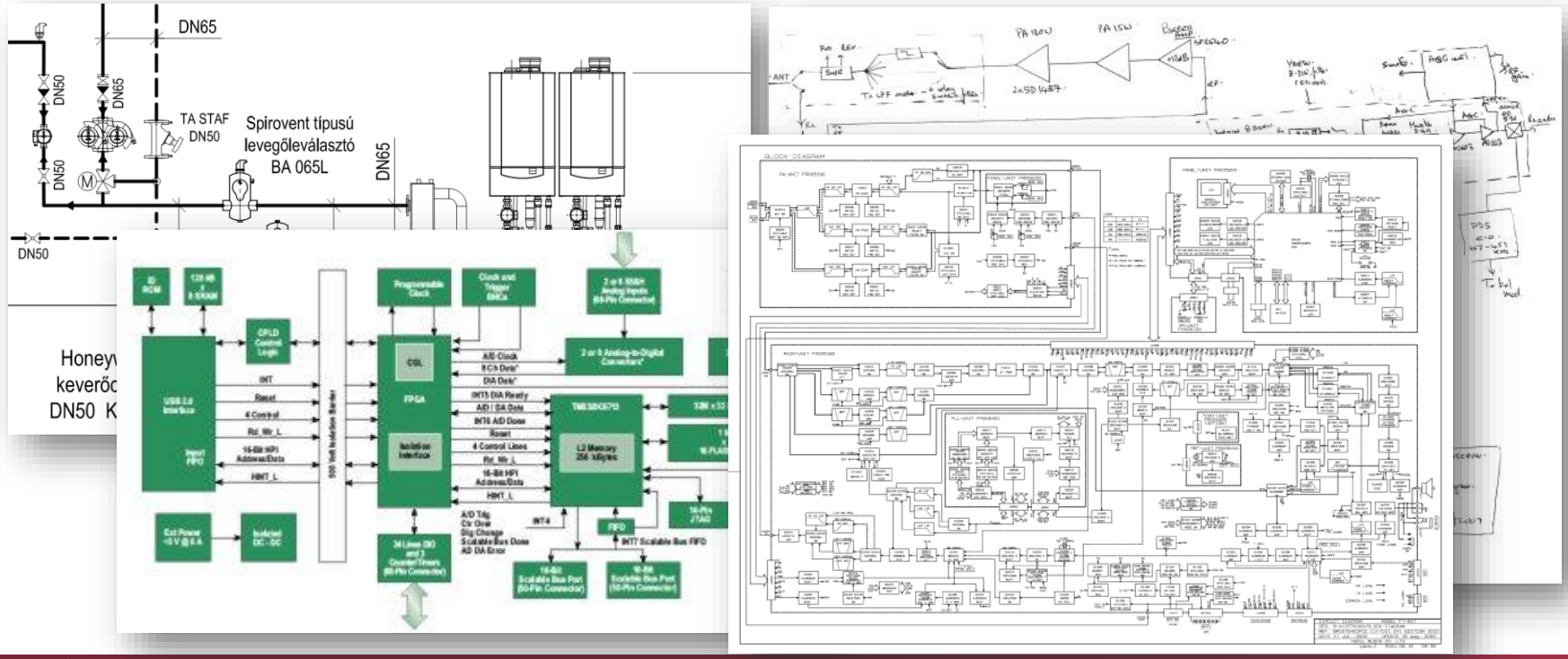

Introduction to Block-based Design

- Composition from *building blocks…*
  - …by hand or with CAD tools (e.g. Matlab Simulink)
  - **Block**: reusable component/subsystem with **properties** and **connections**
- How can we build this complex system?
  - We need a structural model to guide the process

Assembly Instructions

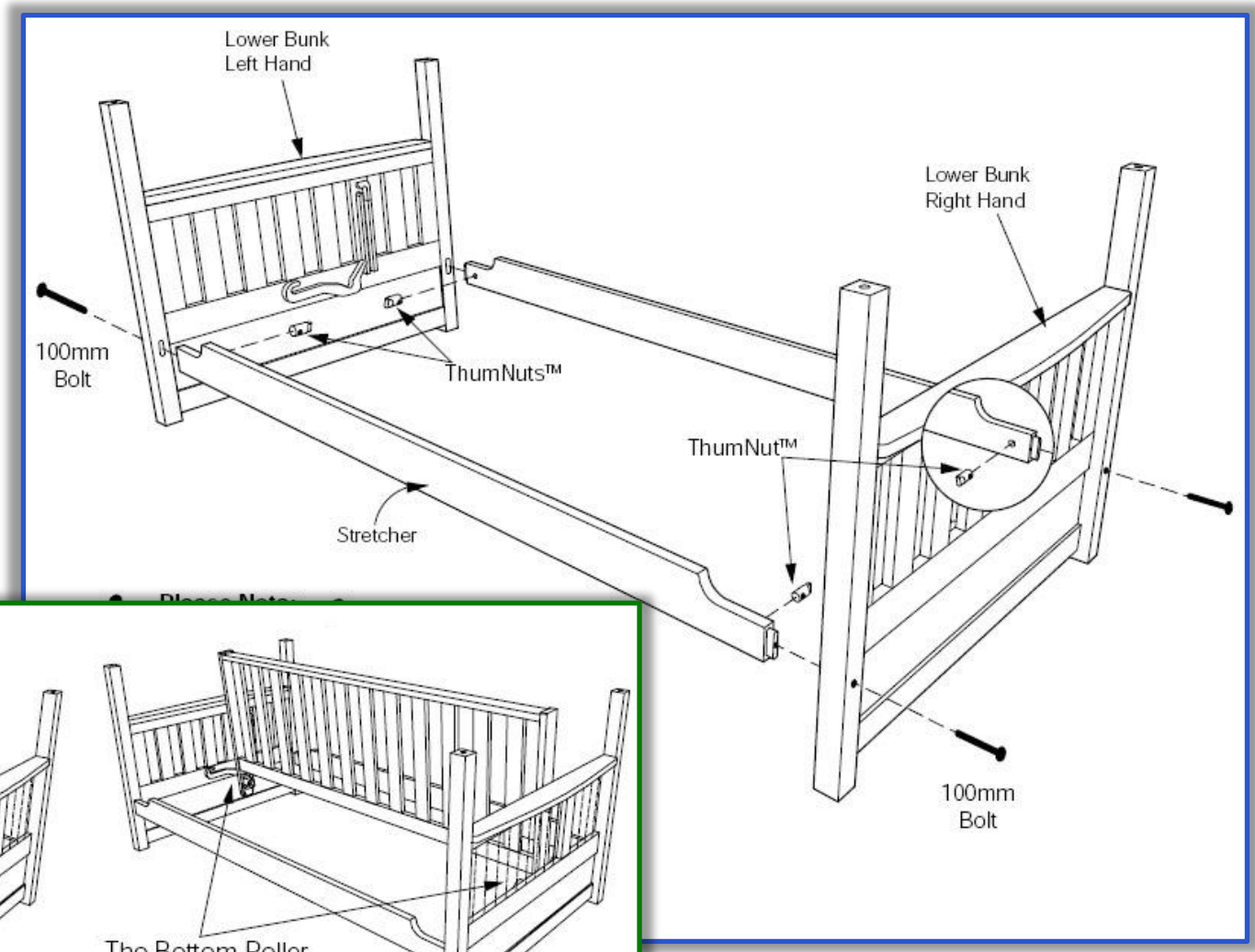

Parts Catalogue

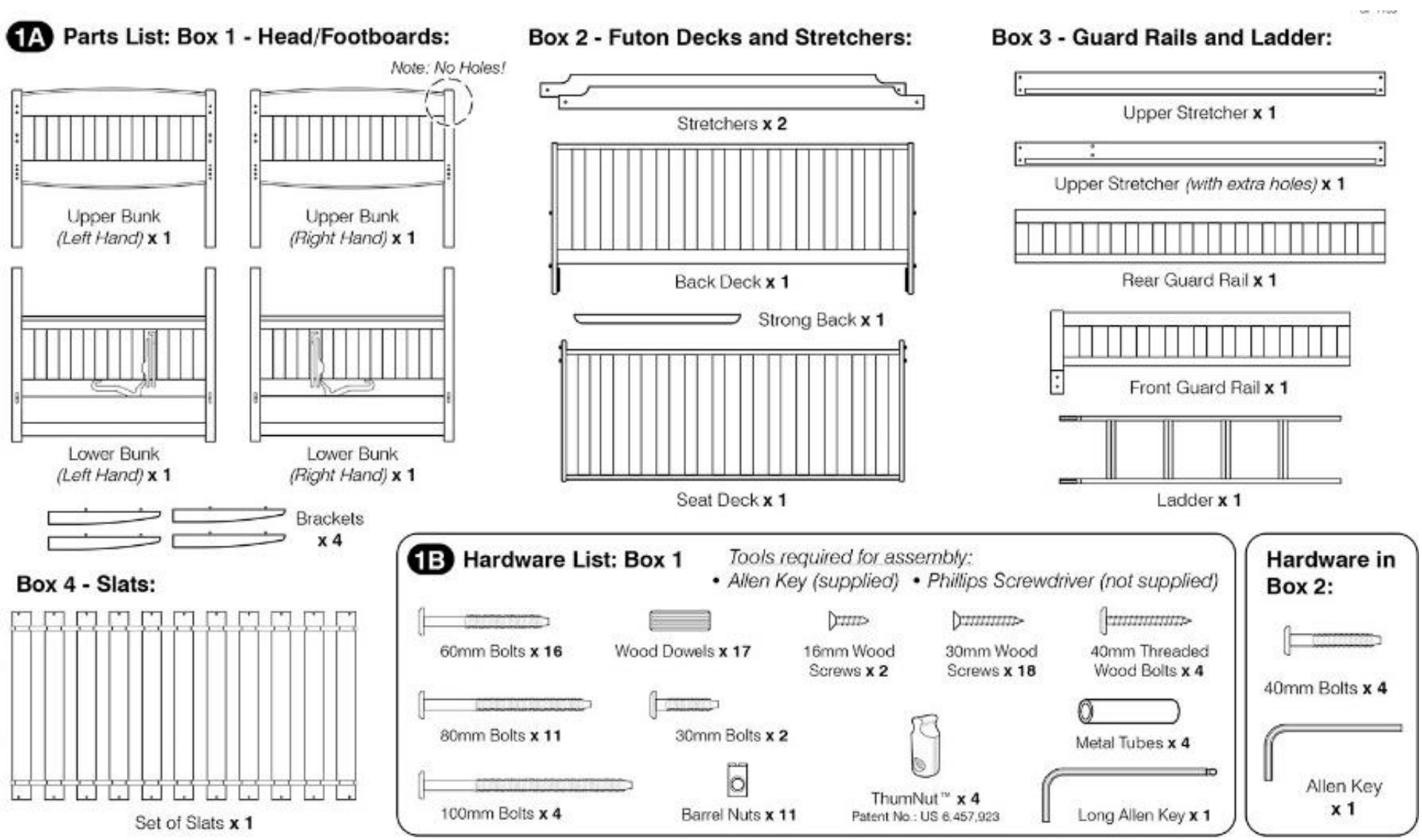

Observations on Block Usage

Blocks/parts are **defined** in a **catalogue** and **used** in **assembly instructions**

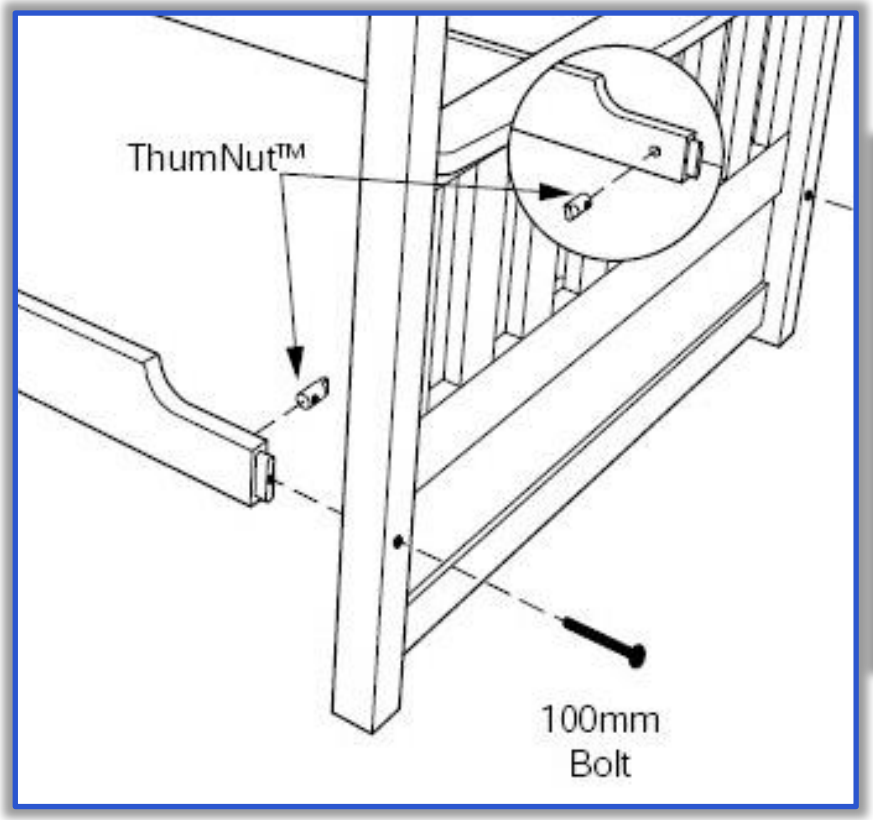

Assembly Instructions

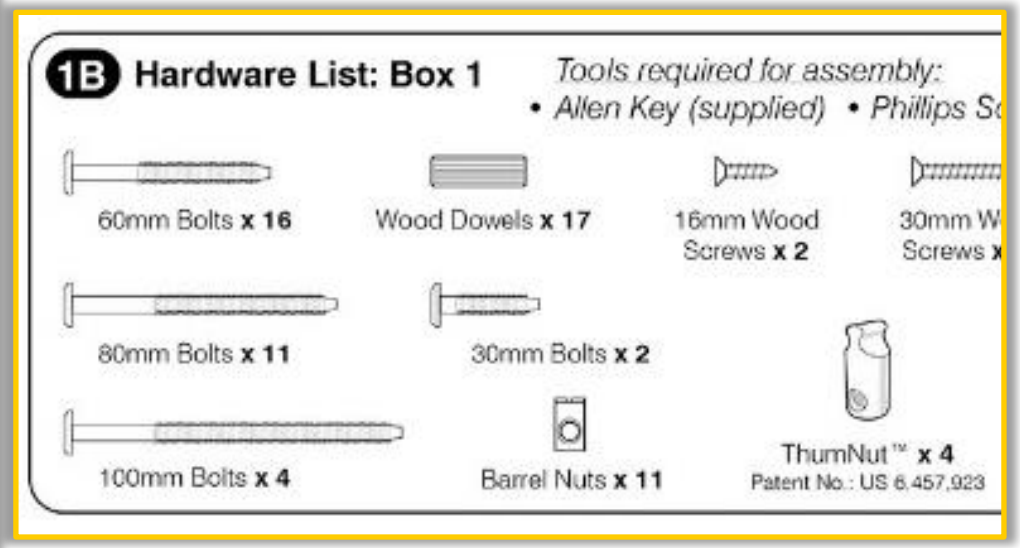

Parts Catalogue

Observations on Block Usage

Building blocks **used** in assembly instructions refer to their **definitions** in the parts catalogue

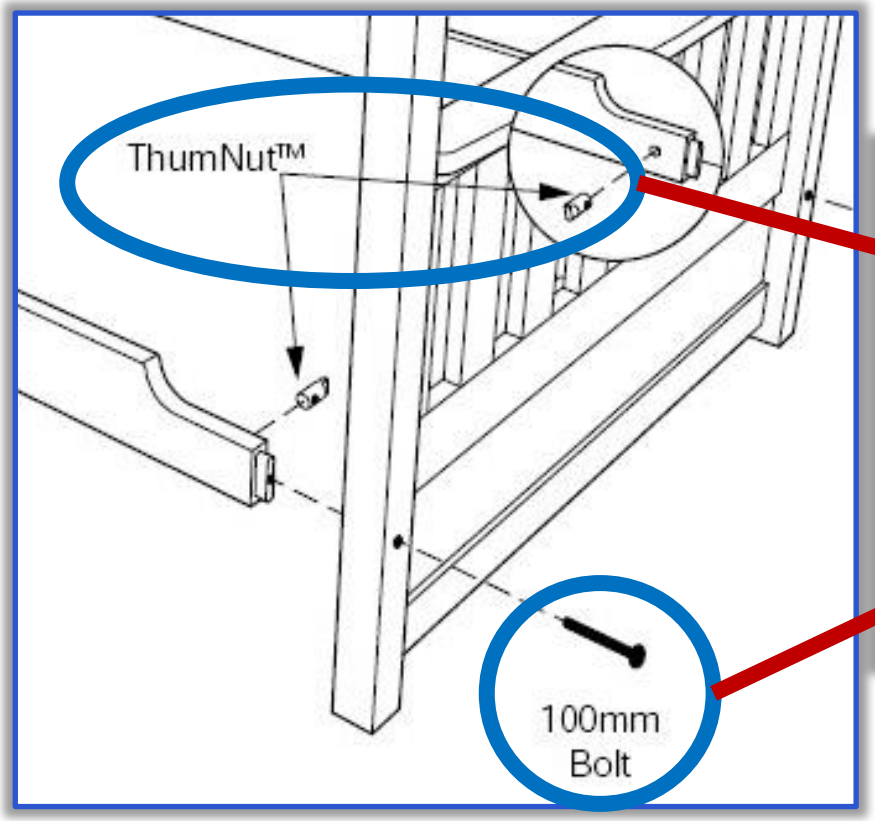

Assembly Instructions

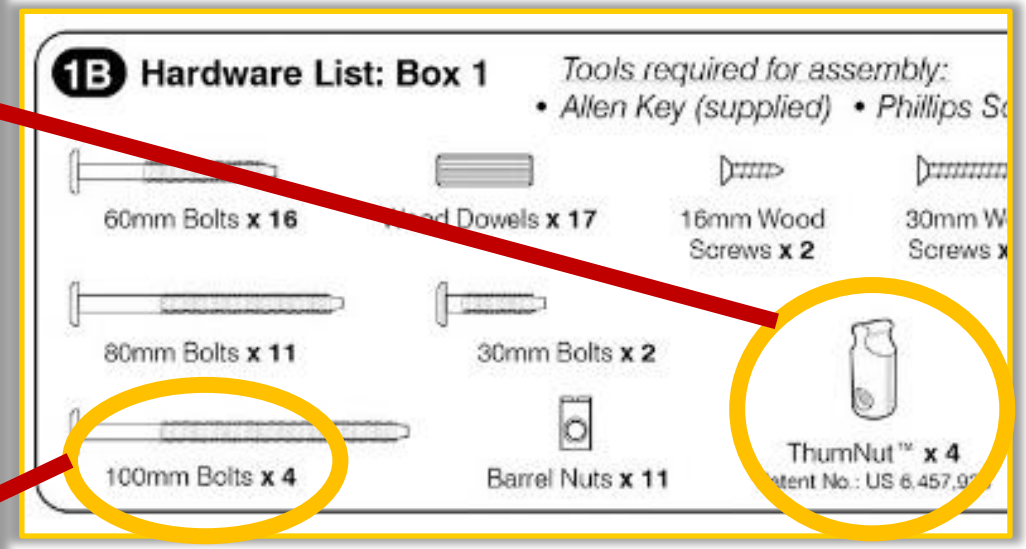

Parts Catalogue

Observations on Block Usage

The same **part definition** can be **used** multiple times in different **roles**

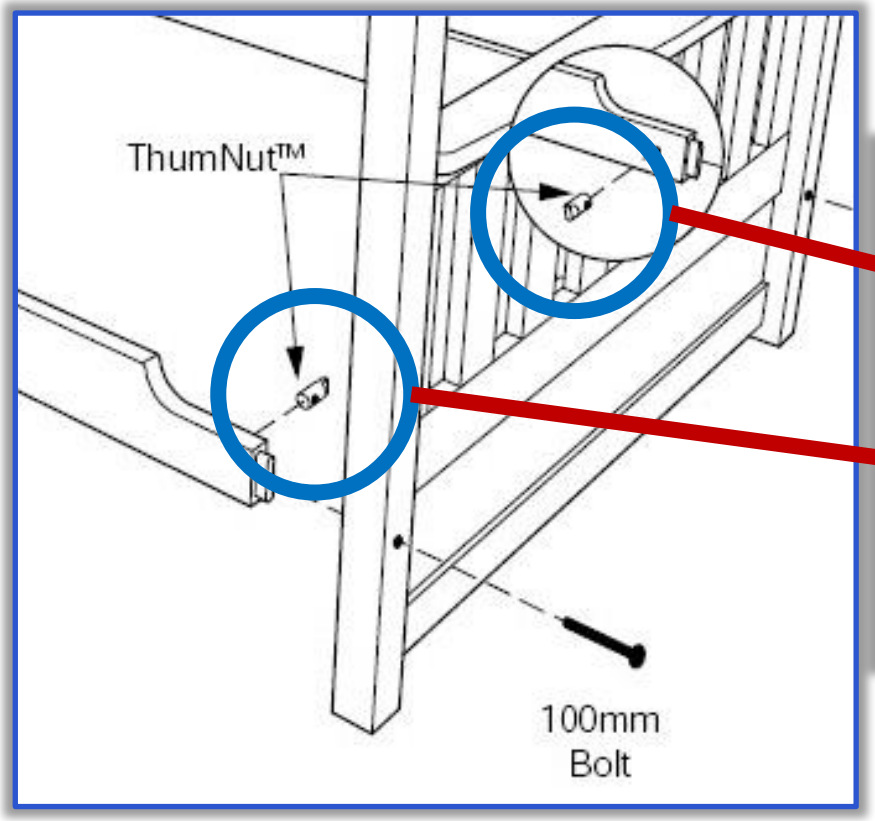

Assembly Instructions

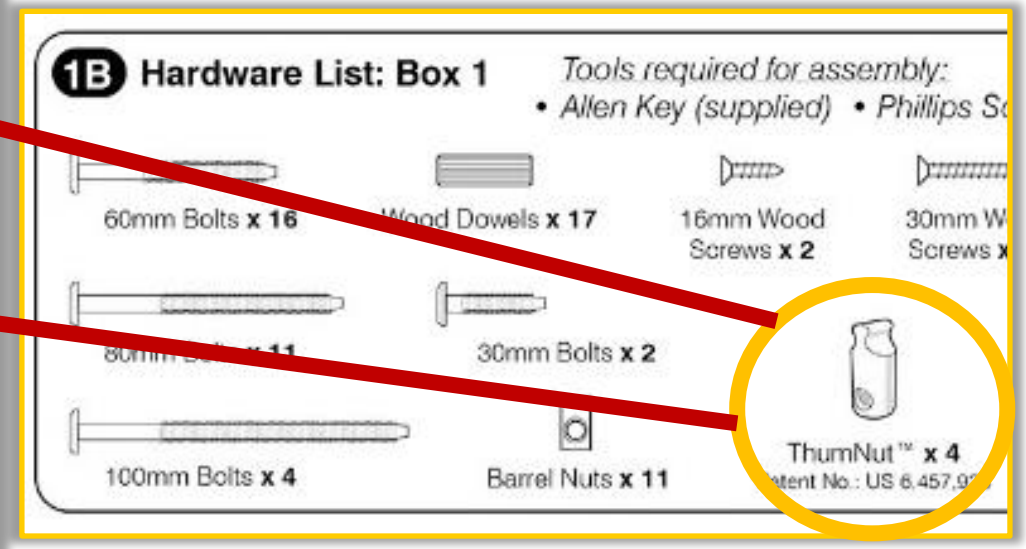

Parts Catalogue

Observations on Block Usage

Block **properties** may be characteristic to the… definition (e.g. *patent no.*), use (e.g. *orientation*), or run-time (e.g. *stress*)

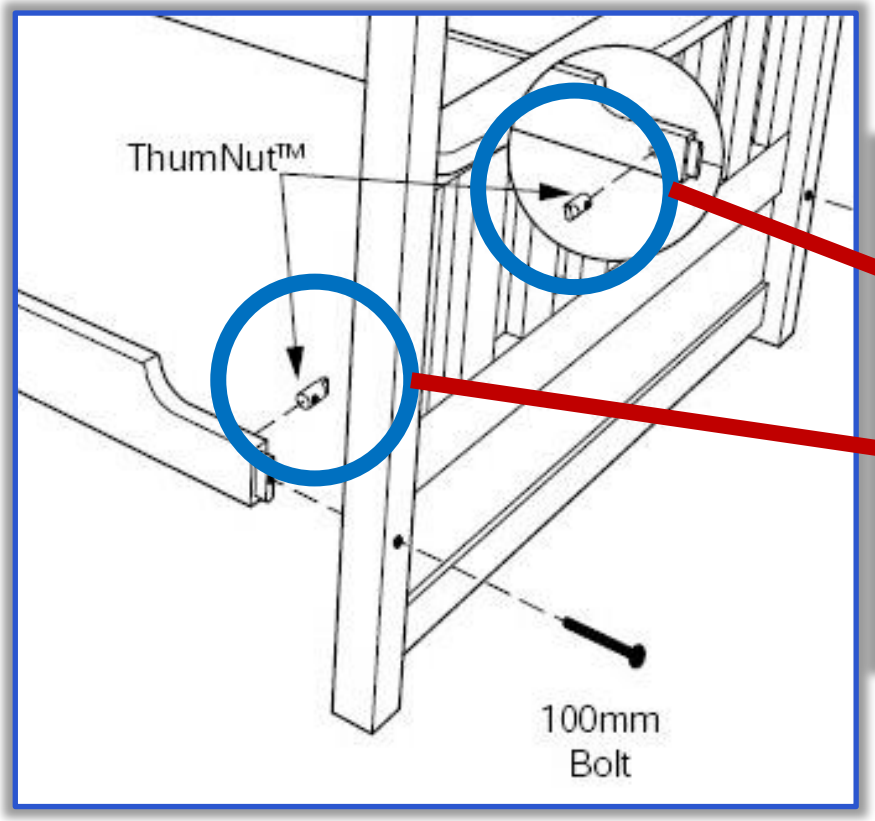

Assembly Instructions

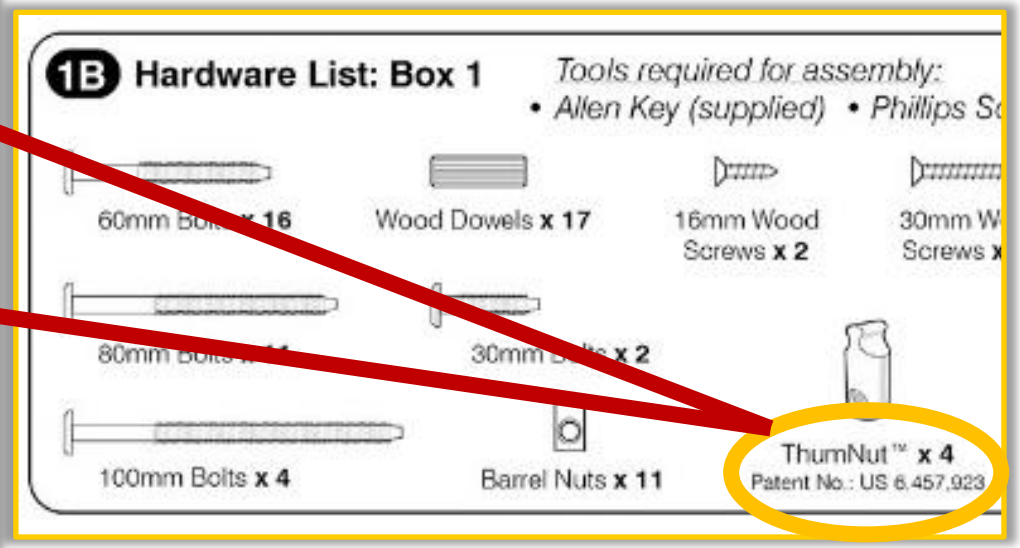

Parts Catalogue

Definition and Use

Real System

Block instance

Block use / prototype / template

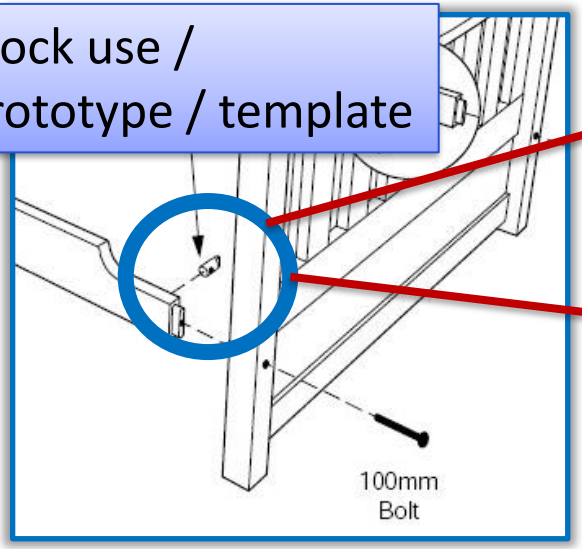

Assembly Instructions

Block definition / type

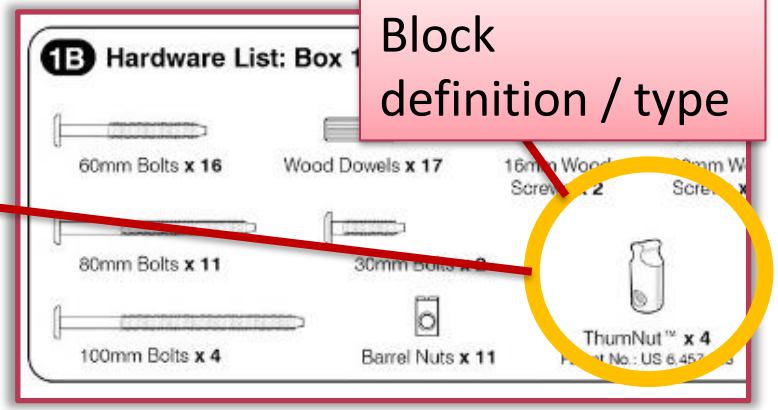

Parts Catalogue

Definition and Use

Not AN INSTANCE of the block type
as it may be instantiated multiple times in different ways for each bed frame

Not THE TYPE of the block instance
(may be *a type* - a refined specialization)
as the focus is on its ROLE within a composite

Block use / prototype / template

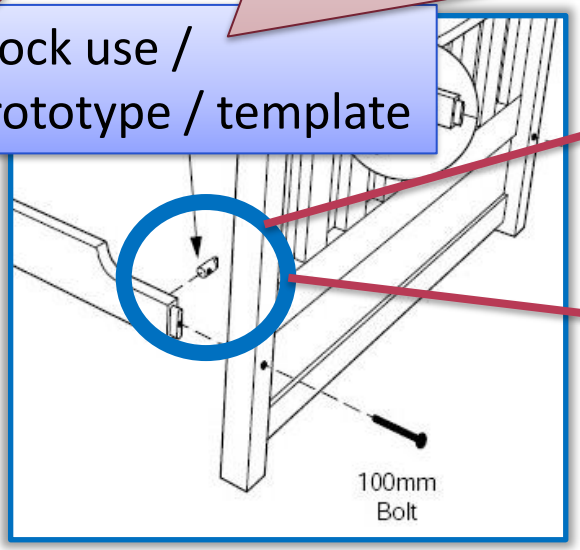

Assembly Instructions

Real System

Block instance

Block definition / type

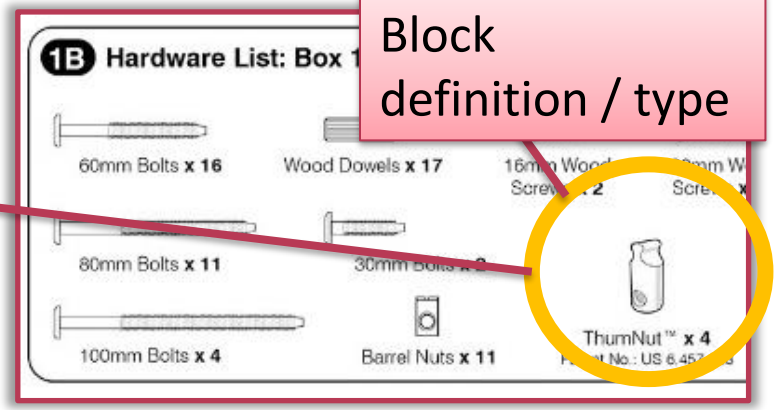

Parts Catalogue

Definition and Use

Real System

42

Not AN INSTANCE of the block type
as it may be instantiated multiple times in different ways for each bed frame

Not THE TYPE of the block instance
(may be *a type* - a refined specialization)
as the focus is on its ROLE within a composite

Block instance

Block use / prototype / template

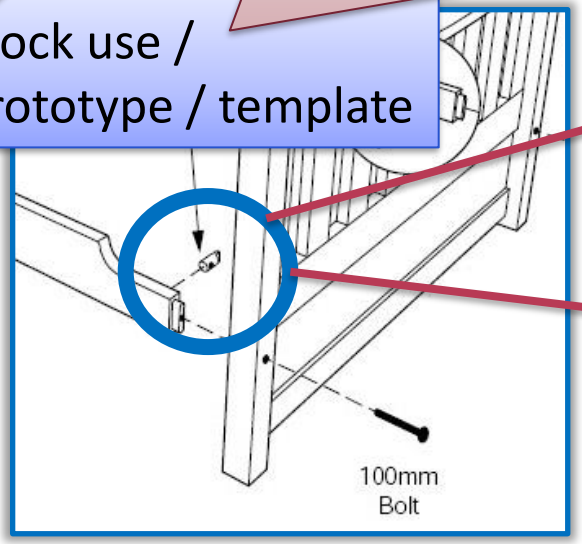

Assembly Instructions

```
private
int x
```

Block definition / type

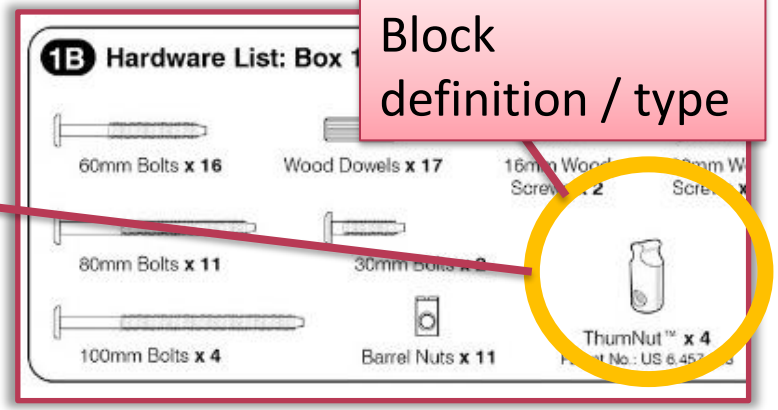

Parts Catalogue

```
int
```

Observations on Block Usage

Some parts may themselves be composites, (de)composed with separate assembly instructions

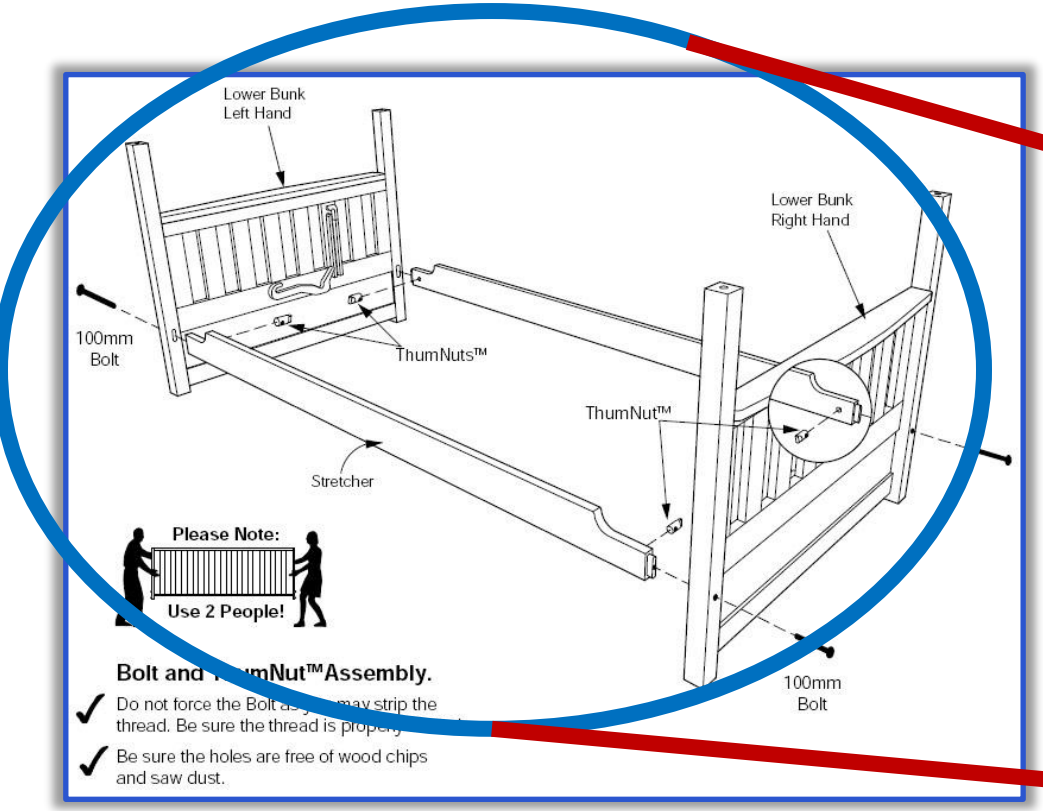

Assembly Instructions 1

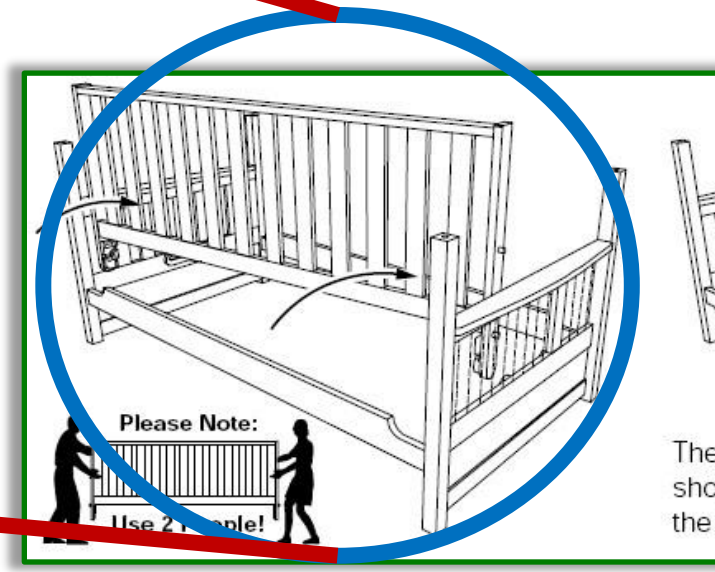

Assembly Instructions 2

Hierarchical Definition and Use

Apartement

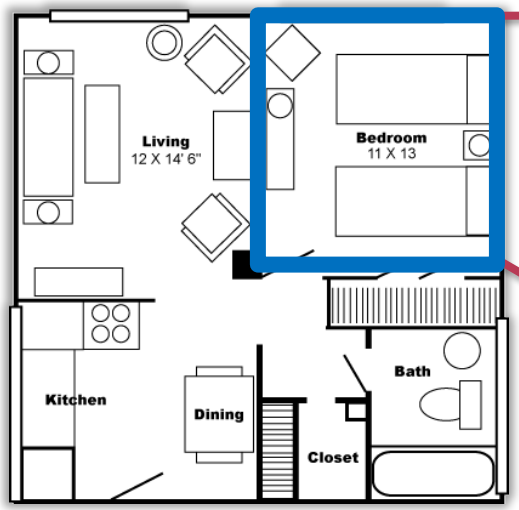

Room

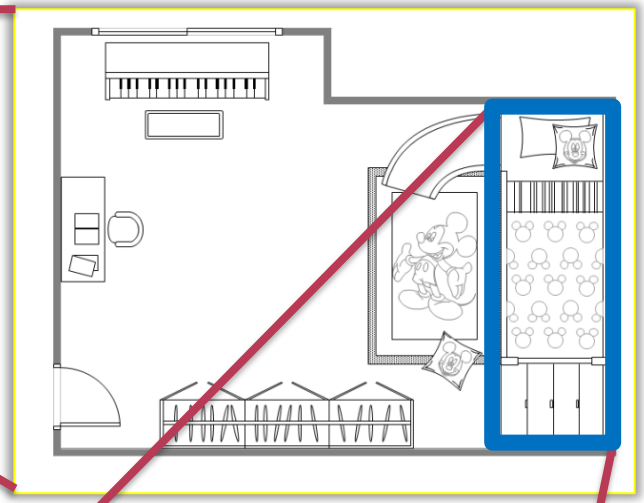

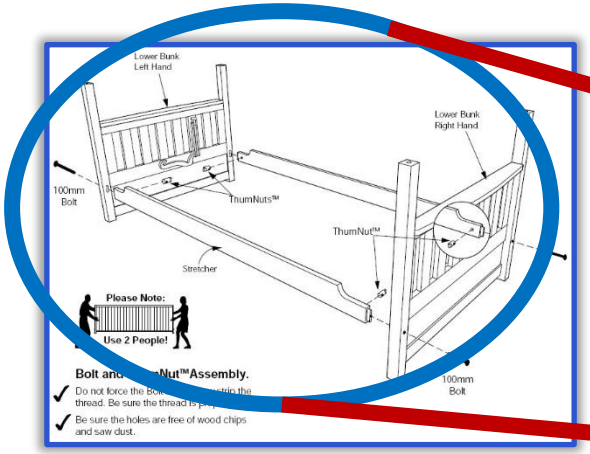

Bed frame

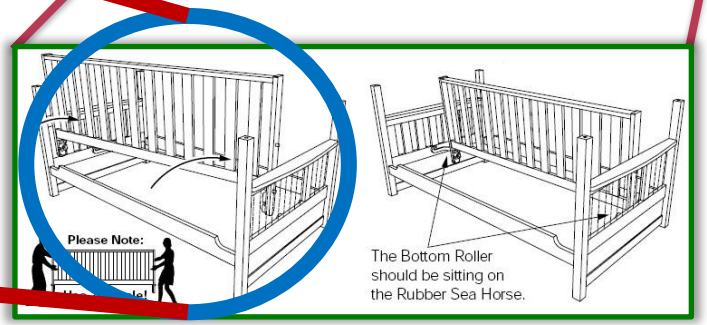

Bed

Structural Modeling in SysML

Structural Modeling in UML vs SysML

- **UML**: Software Engineering terminology
  - Blocks ≅ Classes or Components
  - Parts Catalogue ≅ Class Diagram, Component Diagram
  - Assembly Instructions ≅ Composite Structure Diagram
- **SysML**: more general engineering terminology
  - Blocks are called **blocks** ☺
    - Merging UML Class and Component features
    - Extensions: flow ports, physical dimensions, etc.
  - Parts Catalogue ≅ <u>Block Definition Diagram</u> (**BDD**)
  - Assembly Instructions ≅ <u>Internal Block Diagram</u> (**IBD**)

Block Definition Diagram vs Internal Block Diagram

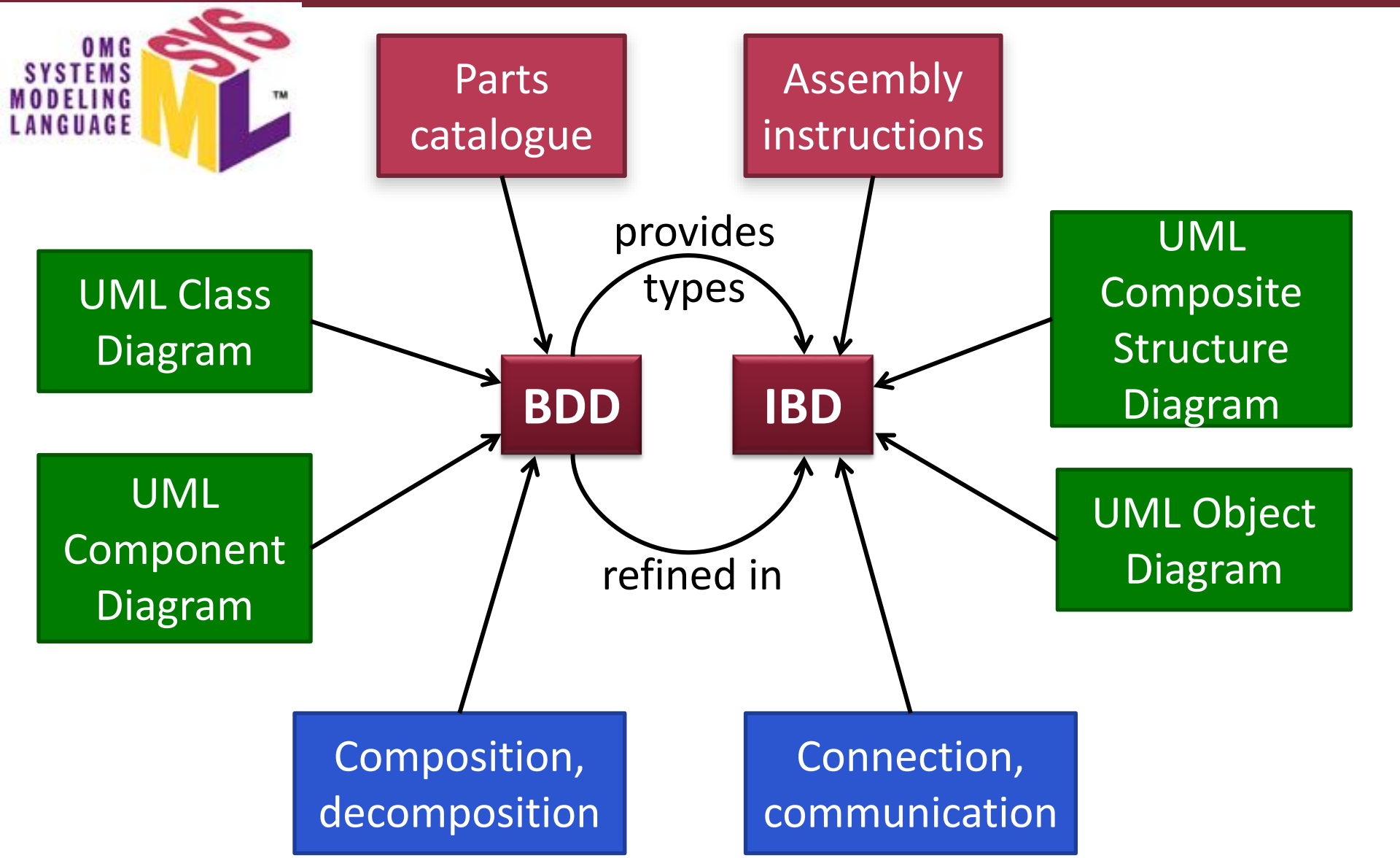

Top-down and bottom-up design in SysML

OMG SYSTEMS MODELING LANGUAGE SysML™

is only a language

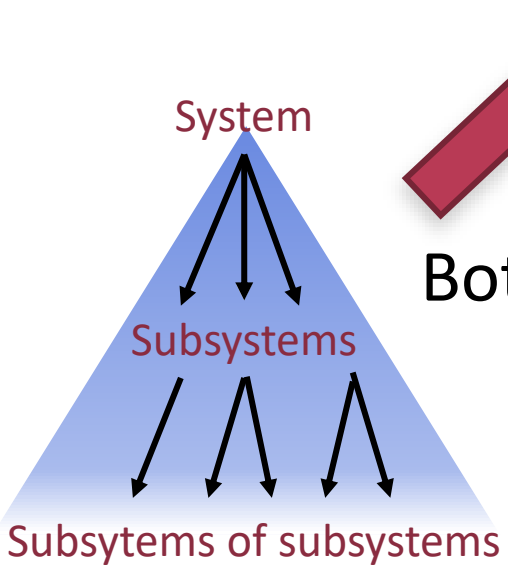

Both approaches can be used
(even at the same time:
meet-in-the-middle)

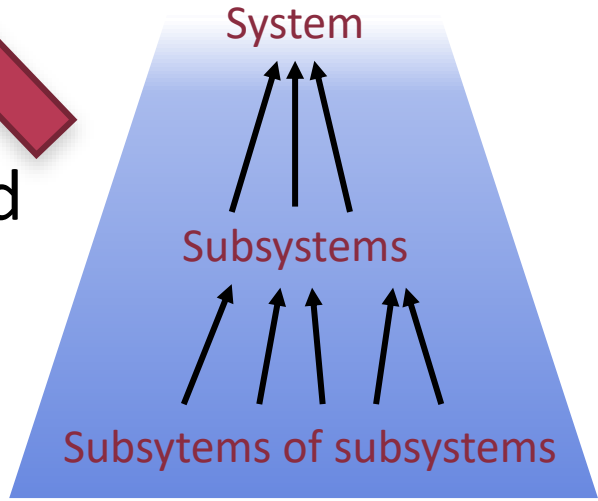

Application to Functional Architecture

- Blocks are **functional units** (components)
  - SW modules, microservices, devices, peripherals, etc.
  - Part-whole relationship ≠ physical containment
  - Connecting blocks ≠ physical linkage
    - Dependencies
    - Information flow
- Don't confuse with…
  - ANSI C functions
  - Functional programming
  - Modeling of functional requirements

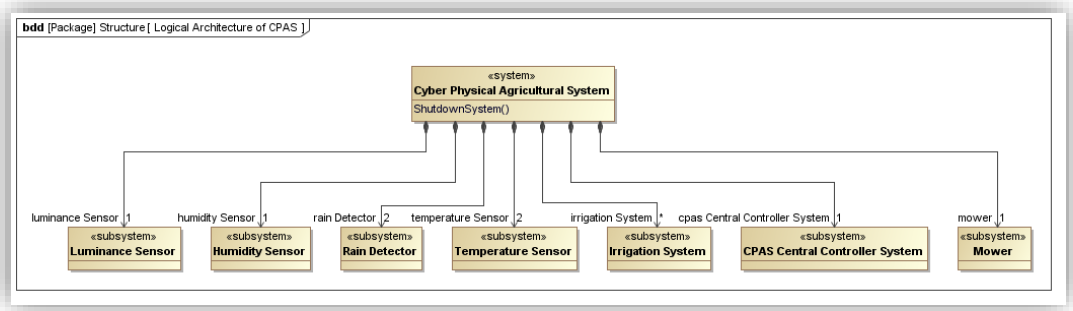

Block Definition Diagram (**BDD**)

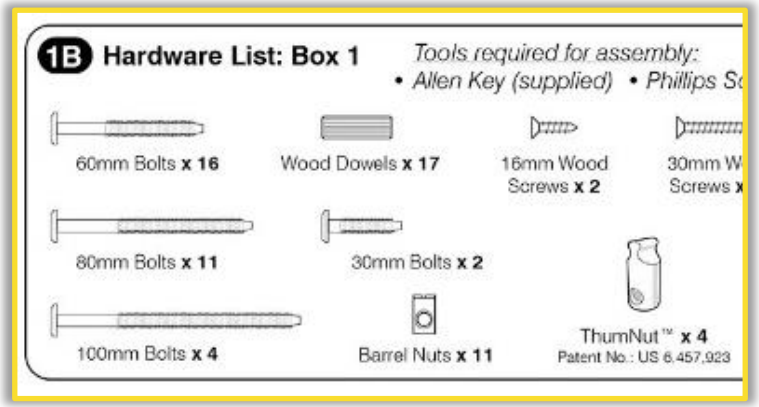

Parts Catalogue

Block Definition Diagram Overview

Block Definition Diagrams

Block Definition Diagram (BDD)

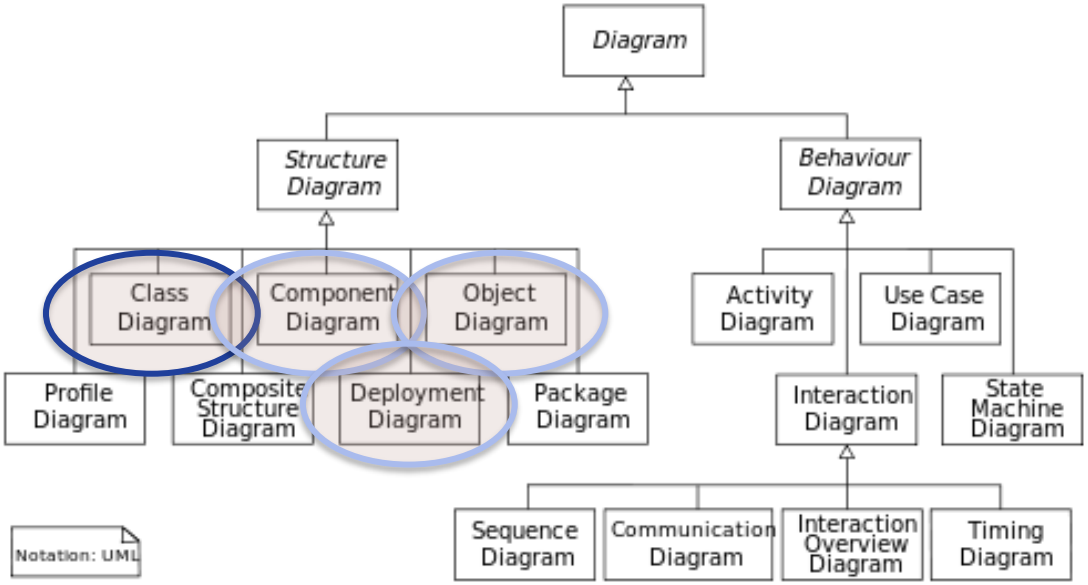

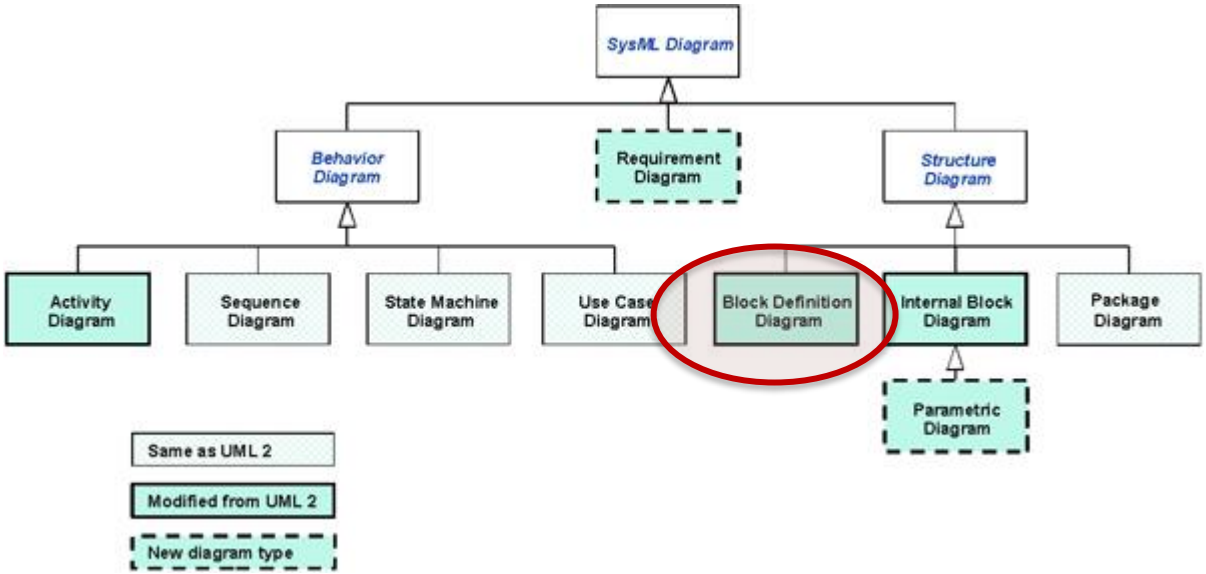

Block nodes

- Basic structural elements
- Anything can be a block
  - System, Subsystems
  - Hardware
  - Software
  - Data
  - Person
  - Flowing object
- UML class with a <<block>> stereotype

optional display on a **bdd**

Block node compartments

Name
(can have special characters)

parts
Compartment

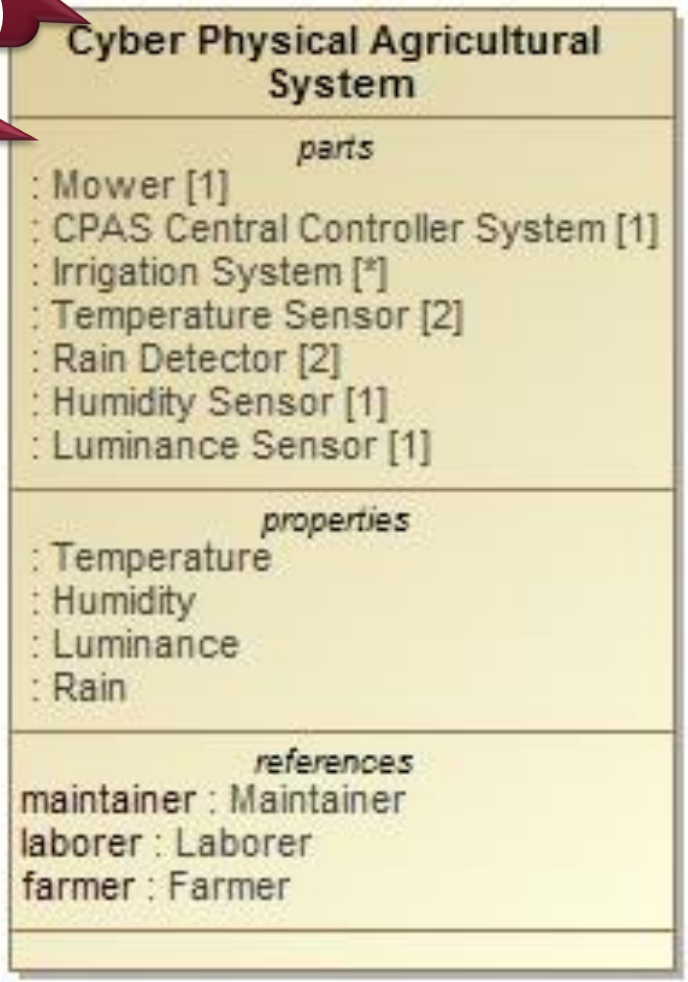

- Parts - contained blocks
- References – referenced blocks
- Values – like UML attributes
- Constraints
- Ports
- Etc…
- Can be hidden on a diagram

(Reference) Association

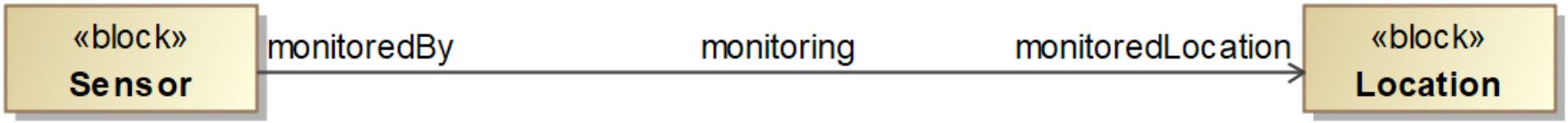

- A relationship *type* between two blocks
  - Undirected: reference property in both blocks
  - Directed: reference only in one block
- End properties: role name, multiplicity, constraints
- (Not mandatory: **ibd** connectors may be untyped)

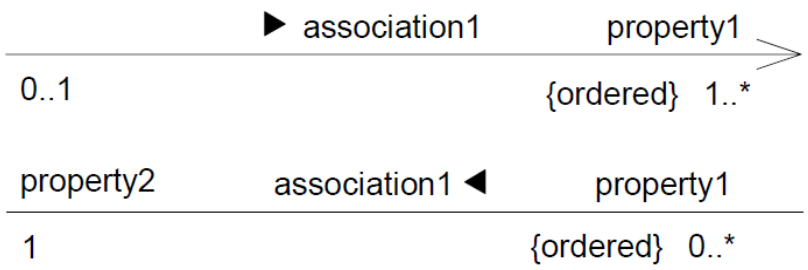

Association Block

- Association represented by a block possibly with structural properties

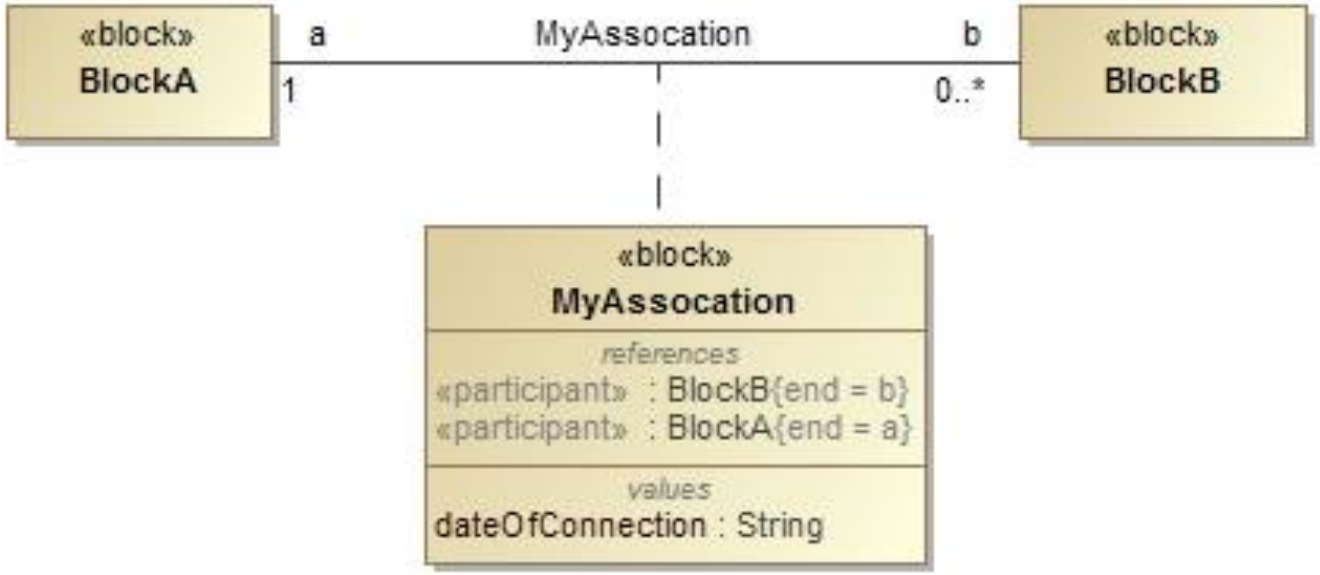

Composition vs Generalization (often misused)

- Composition
  - Container component owns the contained components
  - Container component aggregates instances of contained components

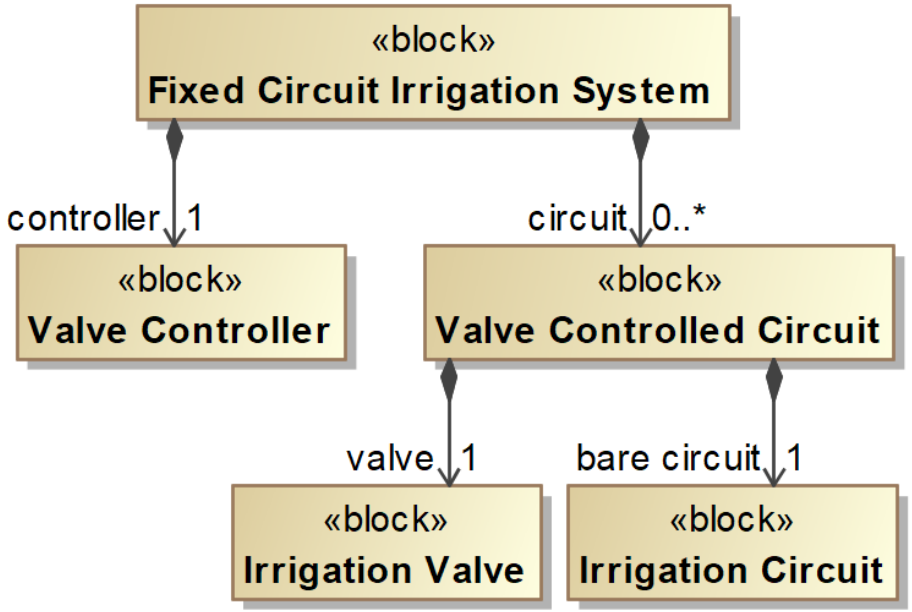

- Generalization
  - Share common features
  - Can be used interchangeably

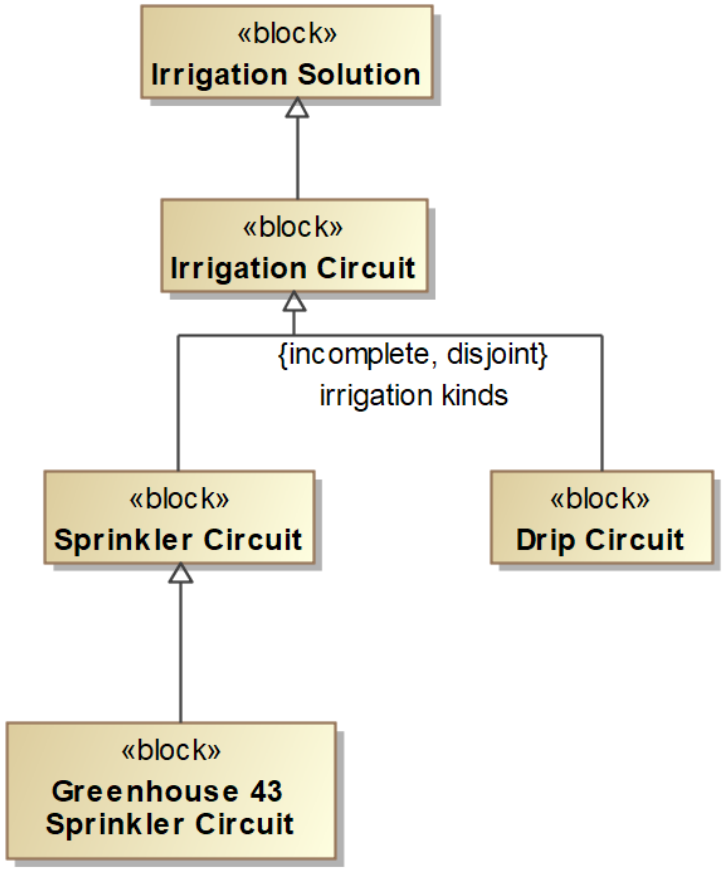

Part (or Composite) Association

- Specifies a strong whole-part hierarchy

	Denotation	Default multiplicity
Whole end	black diamond	0..1
Part end	role name	1..1

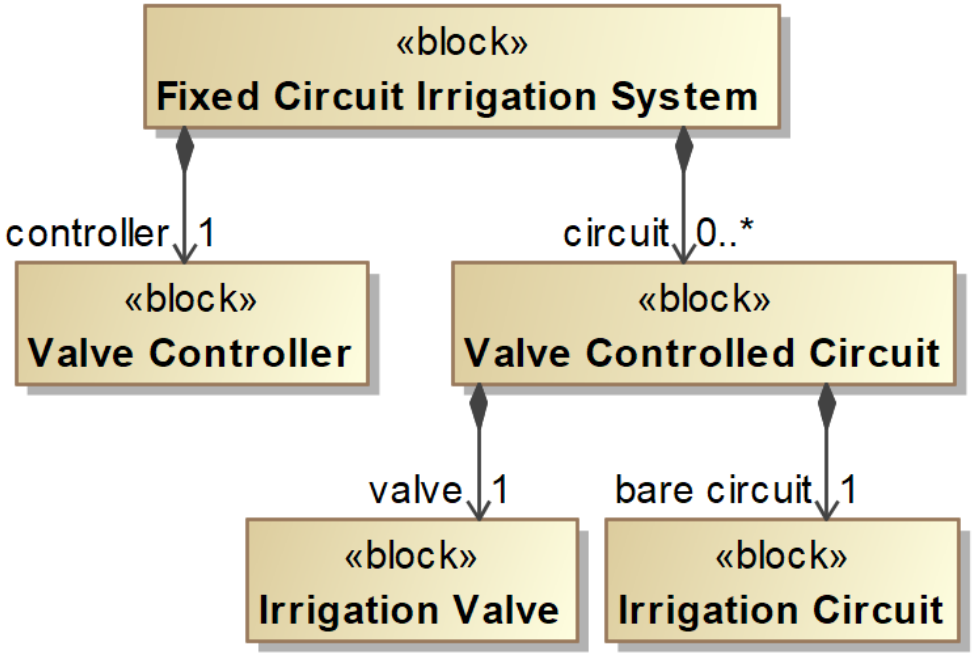

Generalization

- Similar to OOP, UML
  - Key idea: **substitutability**
- Main usages
  - Classification (shared role, feature)
    - Move from specific to general
  - Specific configurations (specific name, values)
    - Move from general to specific
- Adds, defines, redefines properties
- Not just blocks (actors, signals, interfaces, etc.)
- Multiple inheritance is allowed

Generalization

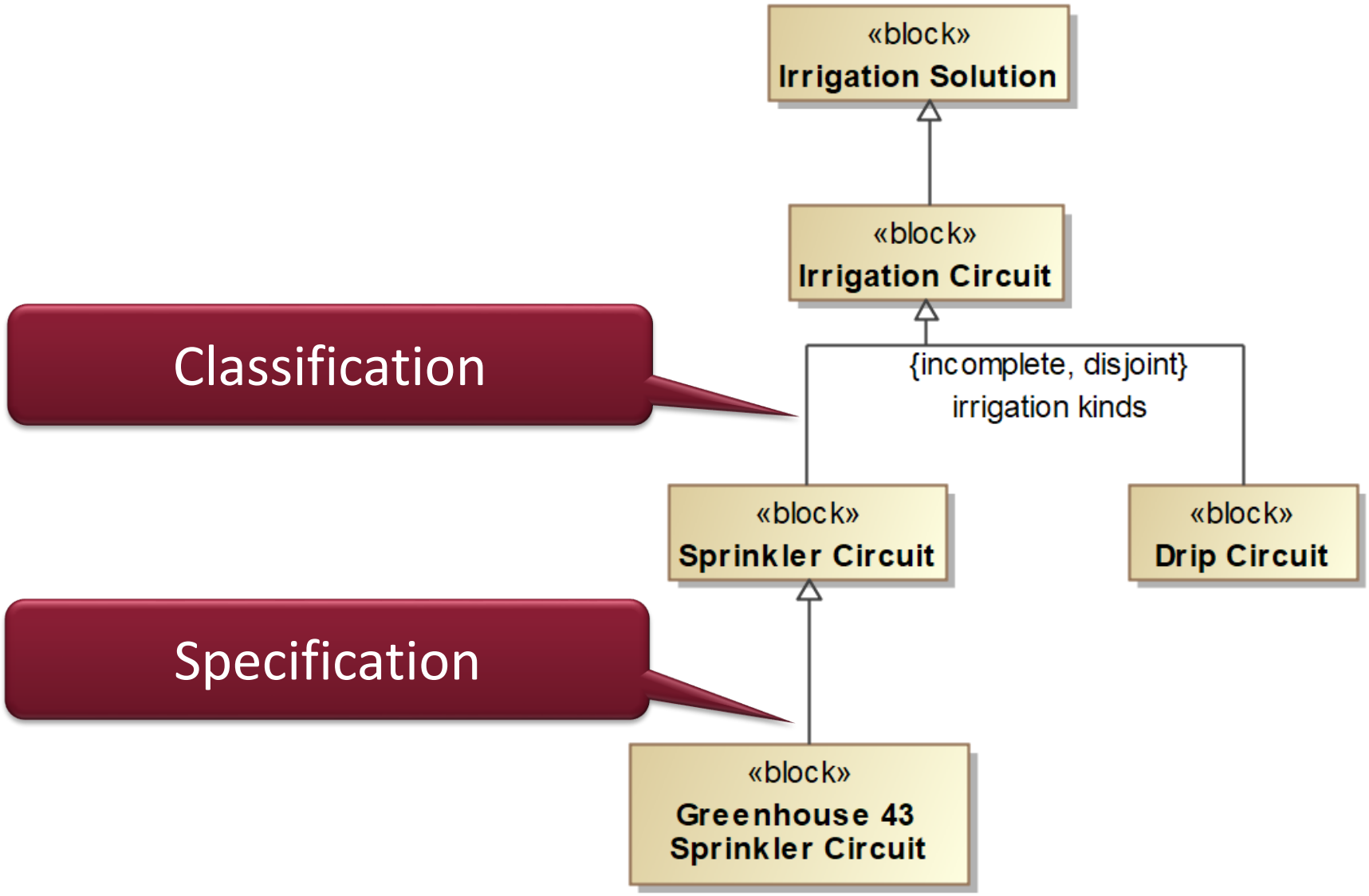

Generalization set

- Generalization relationships, shared *general* end
  - complete – incomplete
  - overlapping – disjoint

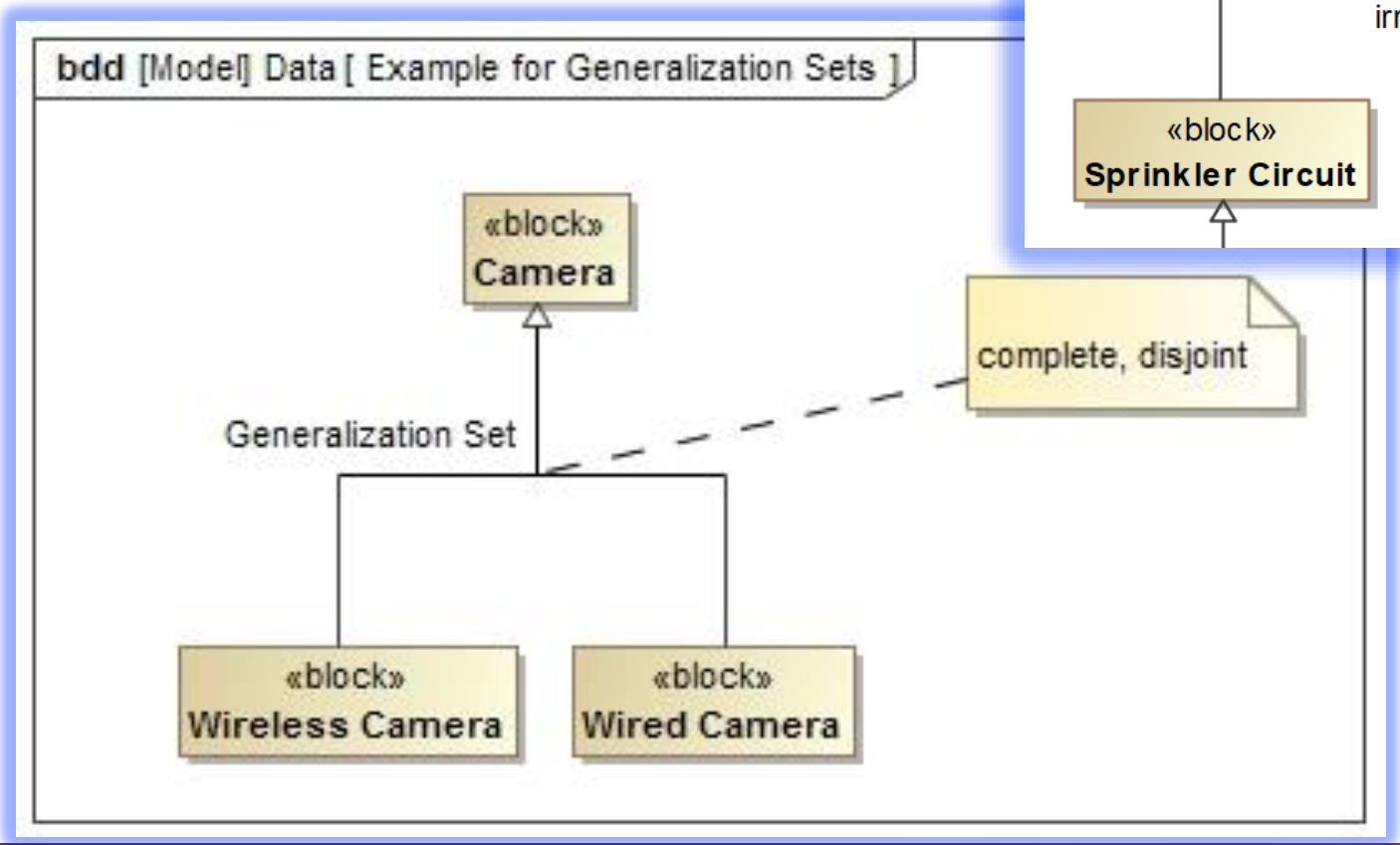

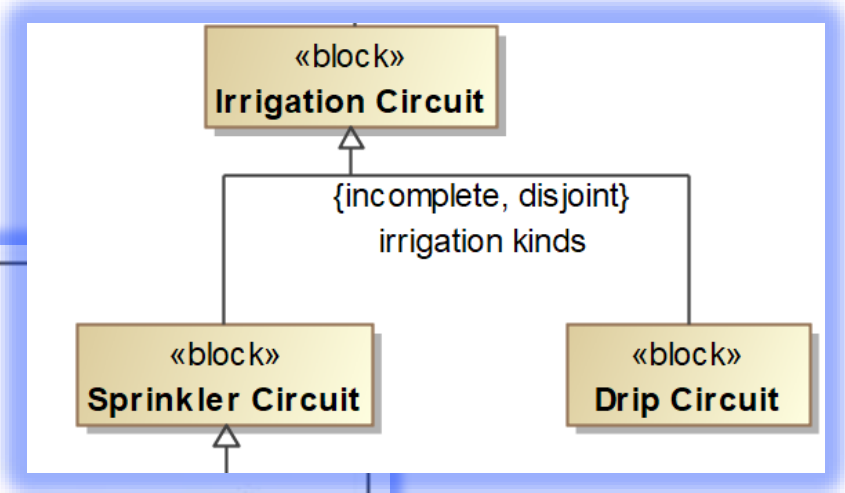

Traceability of BDDs to other artifacts

- Realizes requirements

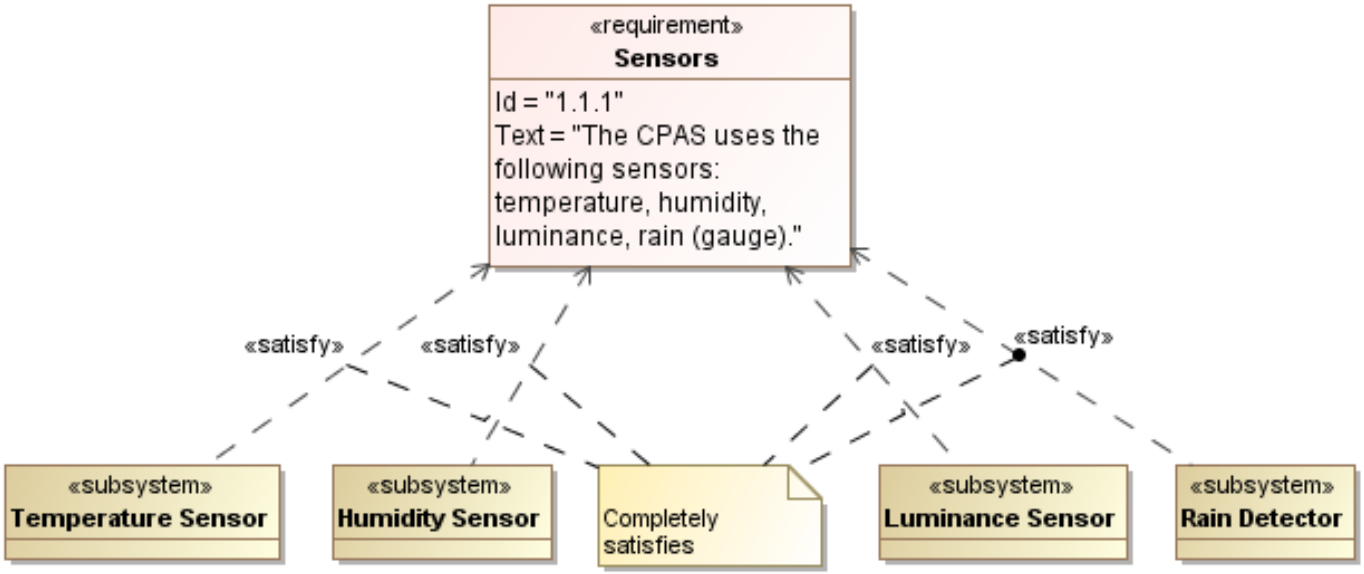

- Allocation (to platform)

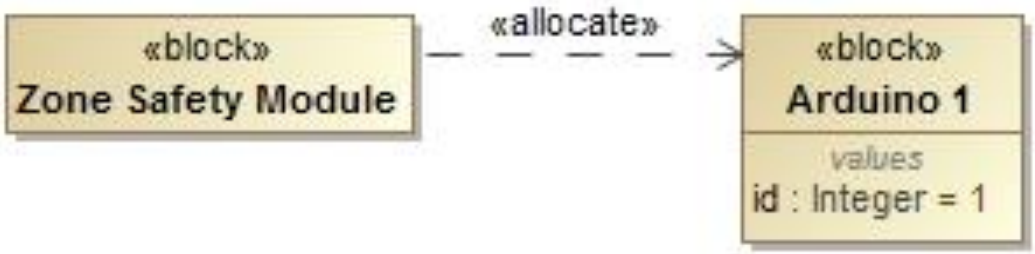

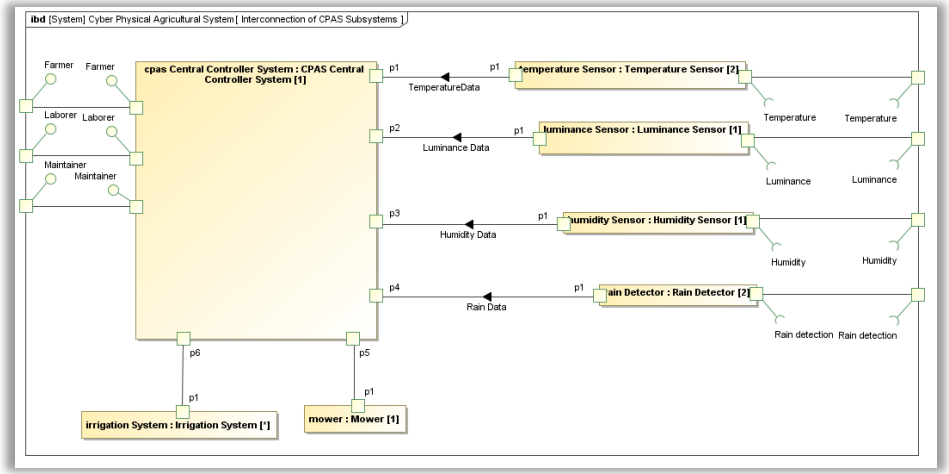

Internal Block Diagrams

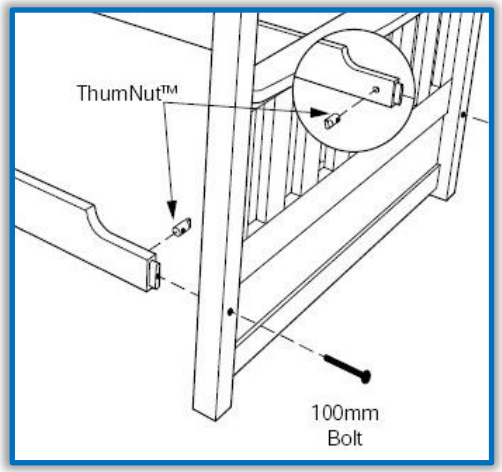

Assembly Instructions

Internal Block Diagram (IBD) Overview

Internal Block Diagram (IBD)

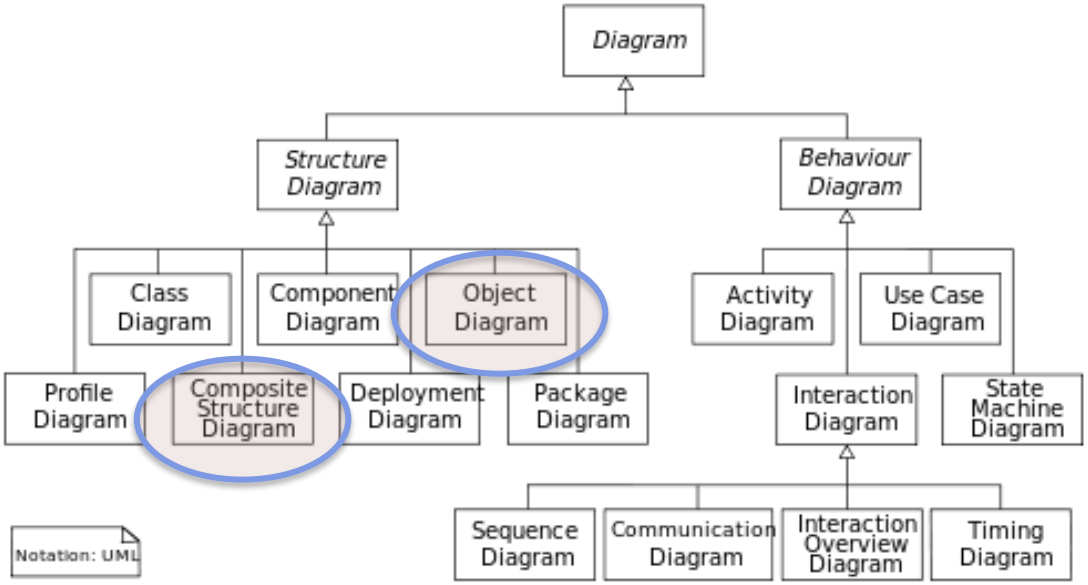

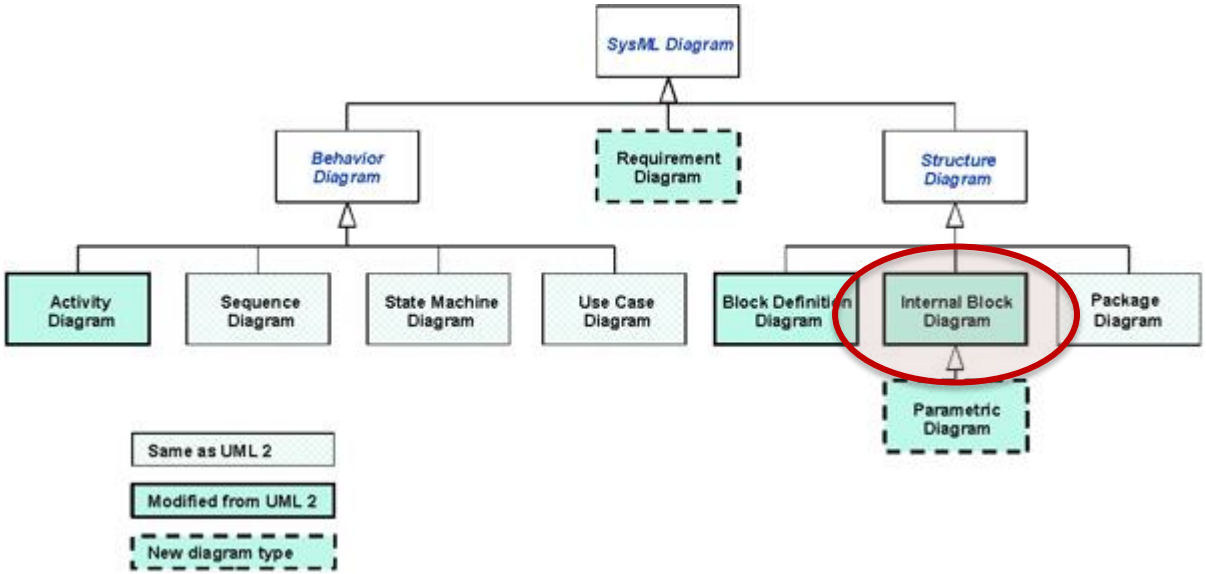

Modeling Aspect

*Breaks down a **composite block** into **part blocks** that make up the whole*

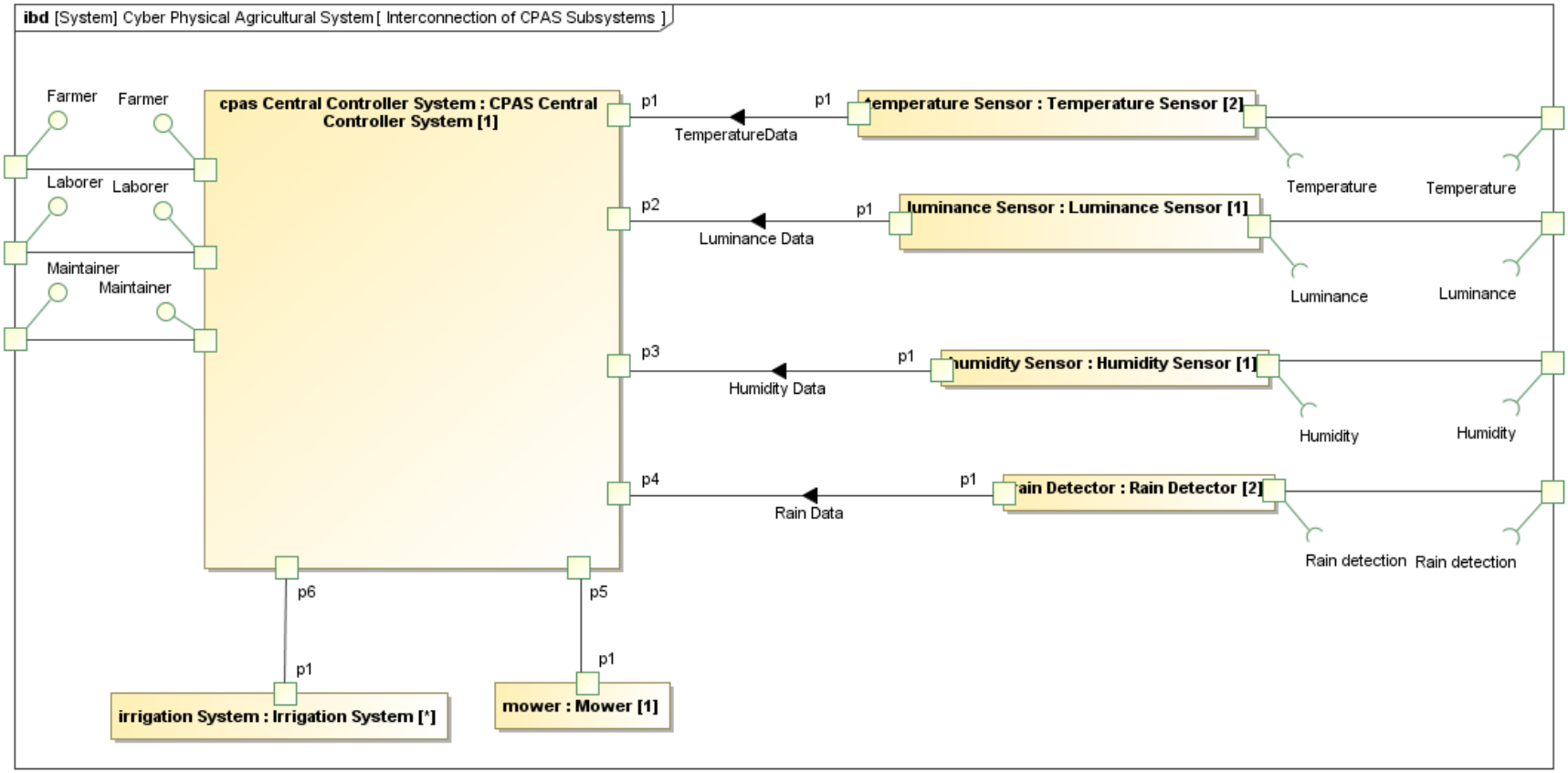

Objectives

- Describe a **composite block** as connected parts
  - Use contained and referenced blocks defined in a **bdd**
  - Use associations and interaction points (ports)
  - Specify connectors (incl. data flow) between parts
    - (Item flows can be mapped to object flows in activities)
  - Specify property restrictions
- Define a template (instance specification)
  - Semantics: if you instantiate the composite block…
    - …you will also have the following parts…
    - …arranged in a specific way

Blocks on IBD

- The *entire* **ibd** represents a block
- Instance specifications (templates / prototypes)
  - Contained blocks (aka. Parts)
  - Referenced blocks
    - (dashed border)
  - Use role names

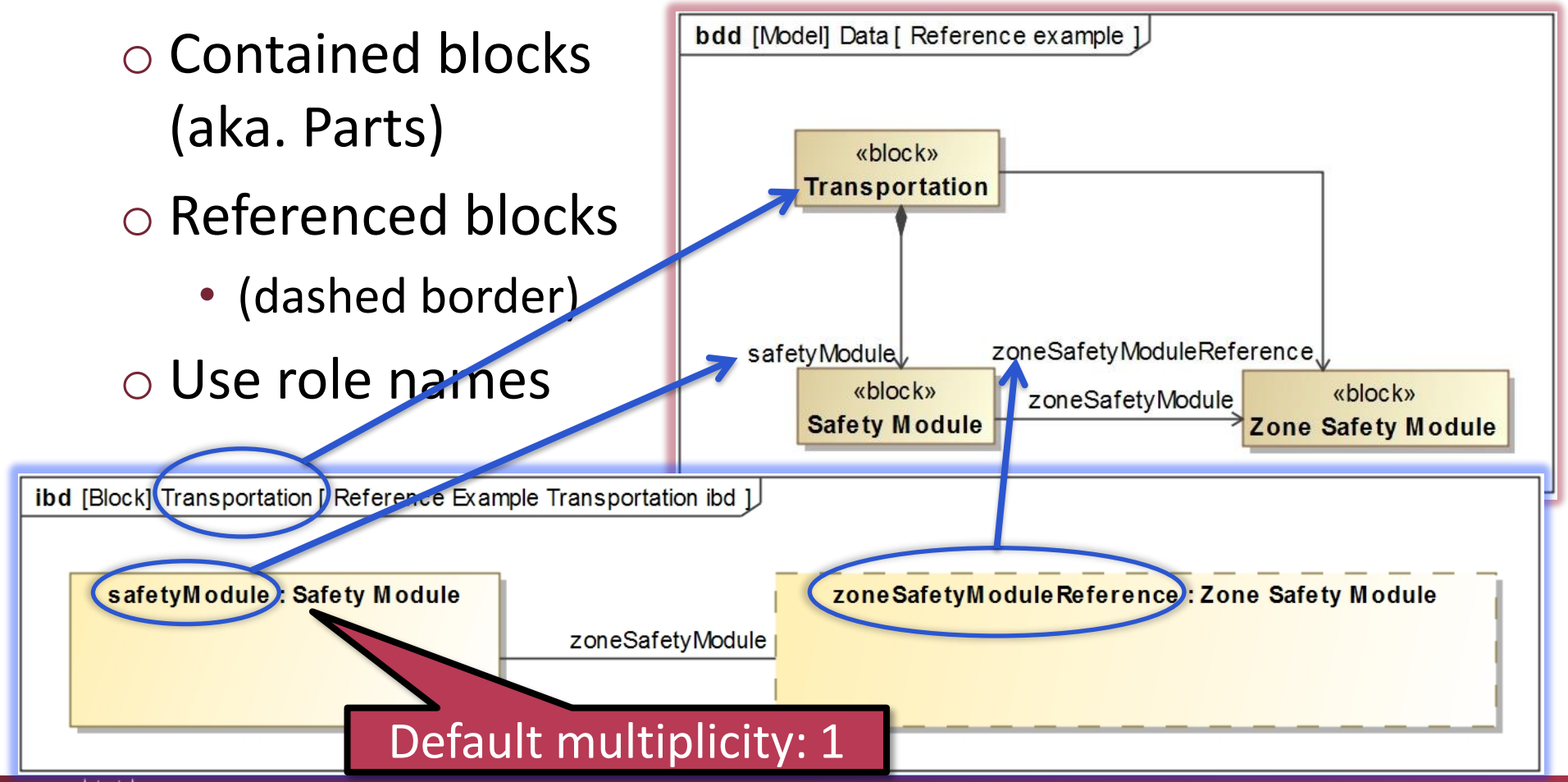

Connectors

- Connectors between blocks (or compatible ports)
- Optionally typed by an association from a **bdd**

Real System

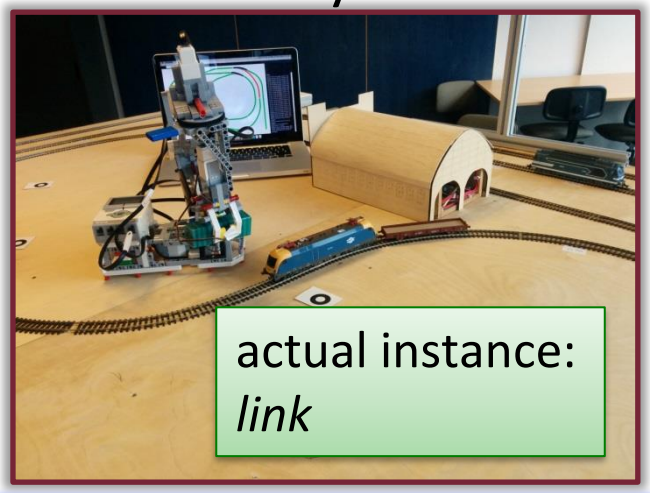

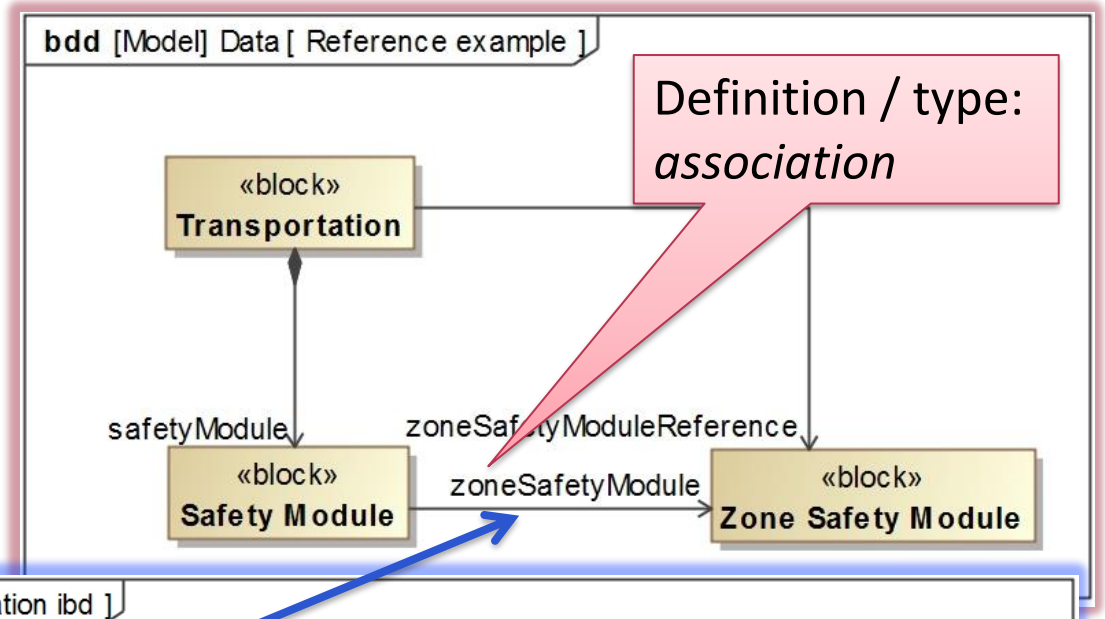

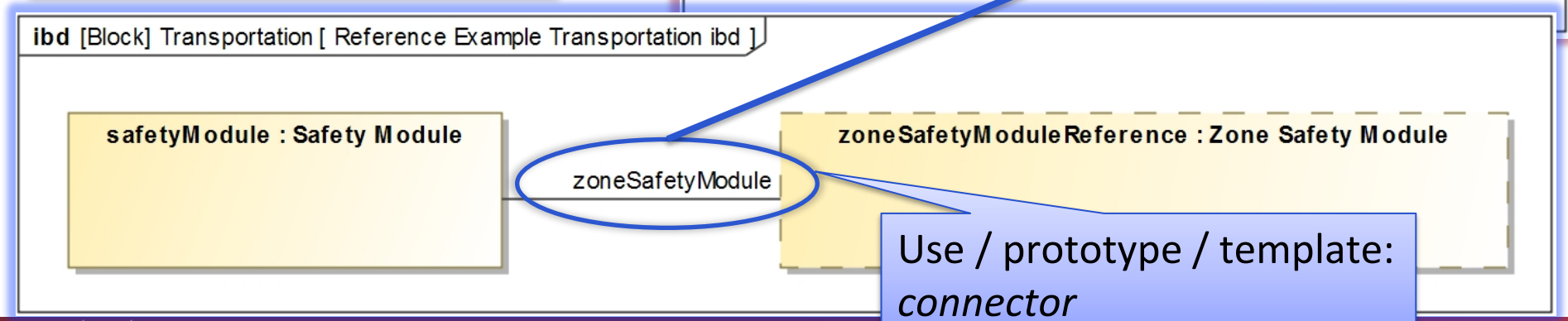

Nested blocks

- Nested blocks
  - Block structure is expanded in an embedded **ibd**
  - Commonly used on **ibd**s
    - (Sometimes on **bdd**, in the *structure* compartment)

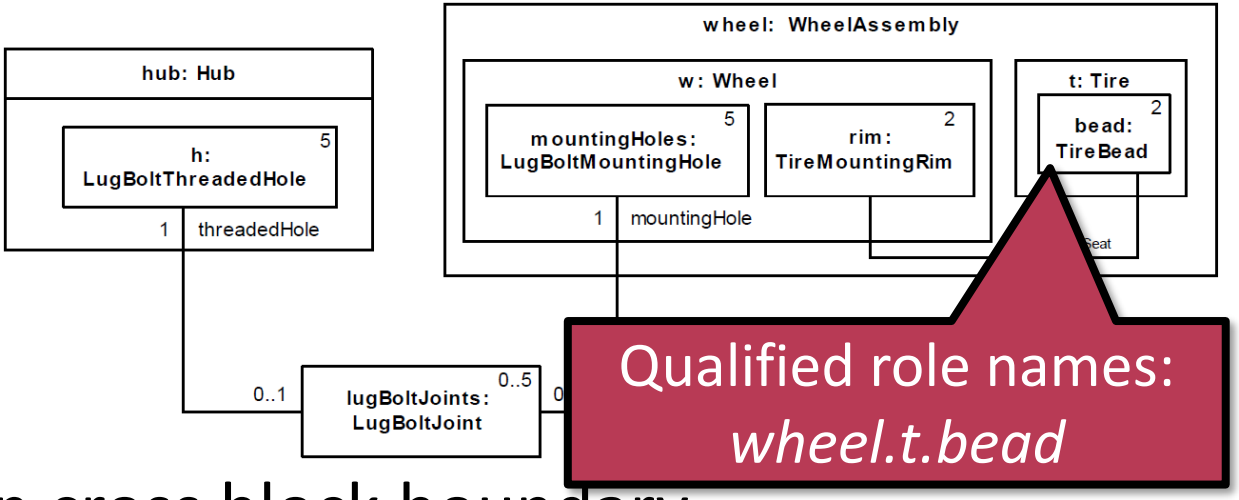

- Encapsulation
  - Connectors can cross block boundary
  - Mark the block *encapsulated* to forbid this

Ports and Interfaces

Internal Block Diagram (IBD)

Ports

- What is a port?
  - Interaction points with external entities limiting and differentiating the possible connection types

REST API:

Method	URL	Payload	Result
POST	/api/InventoryItem	CreateInventoryItemCommand (input)	Creates a new inventory item
GET	/api/InventoryItem	InventoryItemListDataCollection (output)	Returns all items
PUT	/api/InventoryItem/{id}	RenameInventoryItemCommand (input)	Renames an item

Ports

- What is a port?
  - Interaction points with external entities limiting and differentiating the possible connection types

Port of a city

R

	Result
ItemComm	Creates a new inventory item
stDataColle	Returns all items
ryItemCom	Renames an item

Standard ports

- Uses interfaces for communication
  - Provided interface (ball) – defines a service
  - Required interface (socket) – uses a service
    - A port can have multiple required and provided interfaces

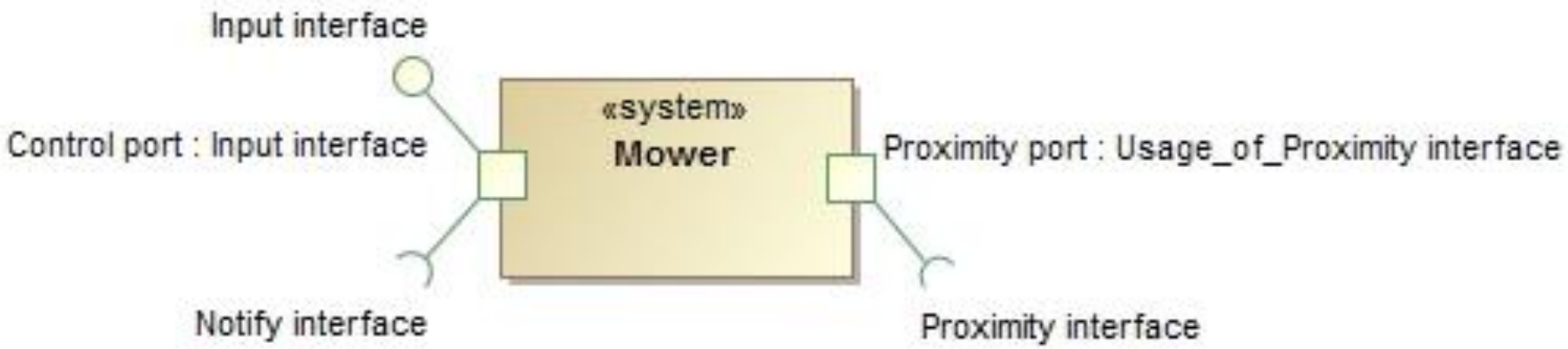

Flow ports (deprecated)

- The connection is described by the flowing item(s) e.g.: data, material, energy, etc.
- Can flow continuously, periodically or aperiodically

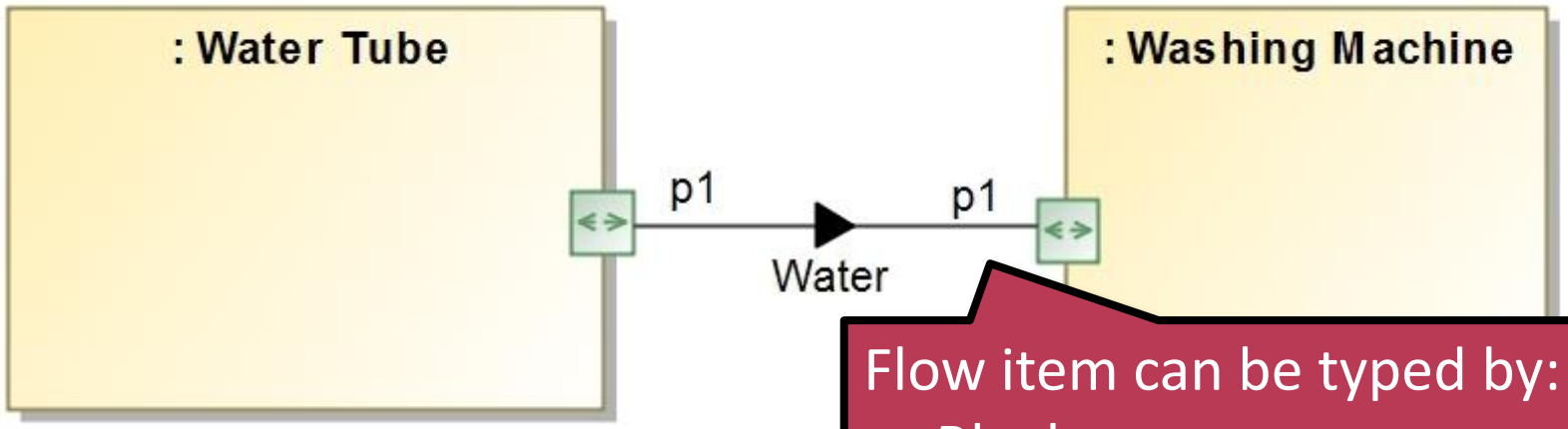

Flow item can be typed by:
- Block,
- Value Type,
- Signal

(Since SysML 1.3, “Flow Port” no longer a distinct language element, any port can have “flow properties”)

Flow Property

- Specifies the kinds of items that might flow between the block (port) and its environment
  - What flows?
    - The type of the Flow Property
  - Where does it flow?
    - Determined by the direction of the property (*in/out/inout*)
- When ports with flow properties are connected
  - A flow will occur if the ends have flow properties…
    - With the same name
    - Same type
    - Opposite directions (or *inout*)

Data, material, energy, etc.

Conjugated Ports

- Automatic way to „turn blocks inside out”
  - When *„IsConjugated”* is *true* for a port
  - Type will be written after a tilde (~)
    - E.g. `port : ~PortyType`
- A conjugated port will behave as if it is „inverted”
  - If the type of the conjugated port has an *out flow* of type X, then the port will have an *in flow* of type X and vice versa
  - Same for provided <-> required interfaces
- Facilitates convenient connection of ports

Full and Proxy Ports

- <<Full>> ports
  - can have internal structure and define behaviour
- <<Proxy>> ports
  - do not own any features
  - only expose internal features of the block

- Connect to contained block…
- …or port on contained block

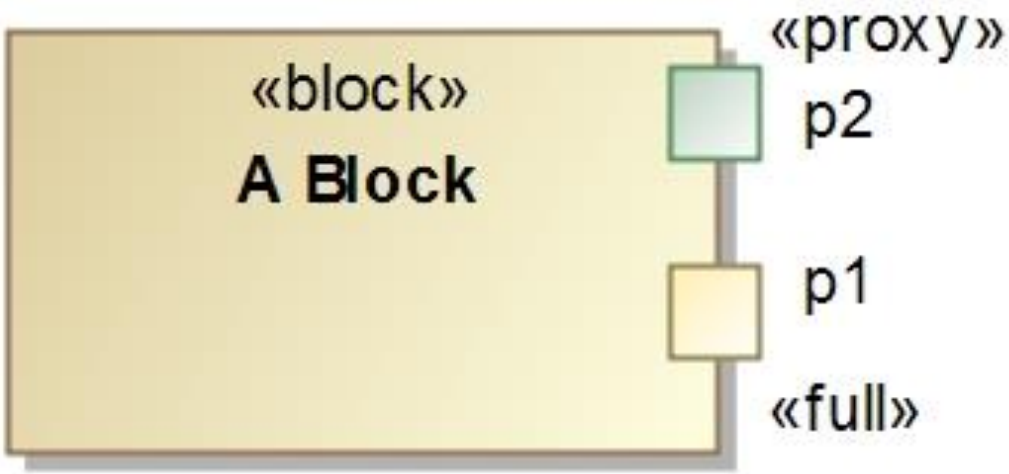

Using Composition instead of Full Port

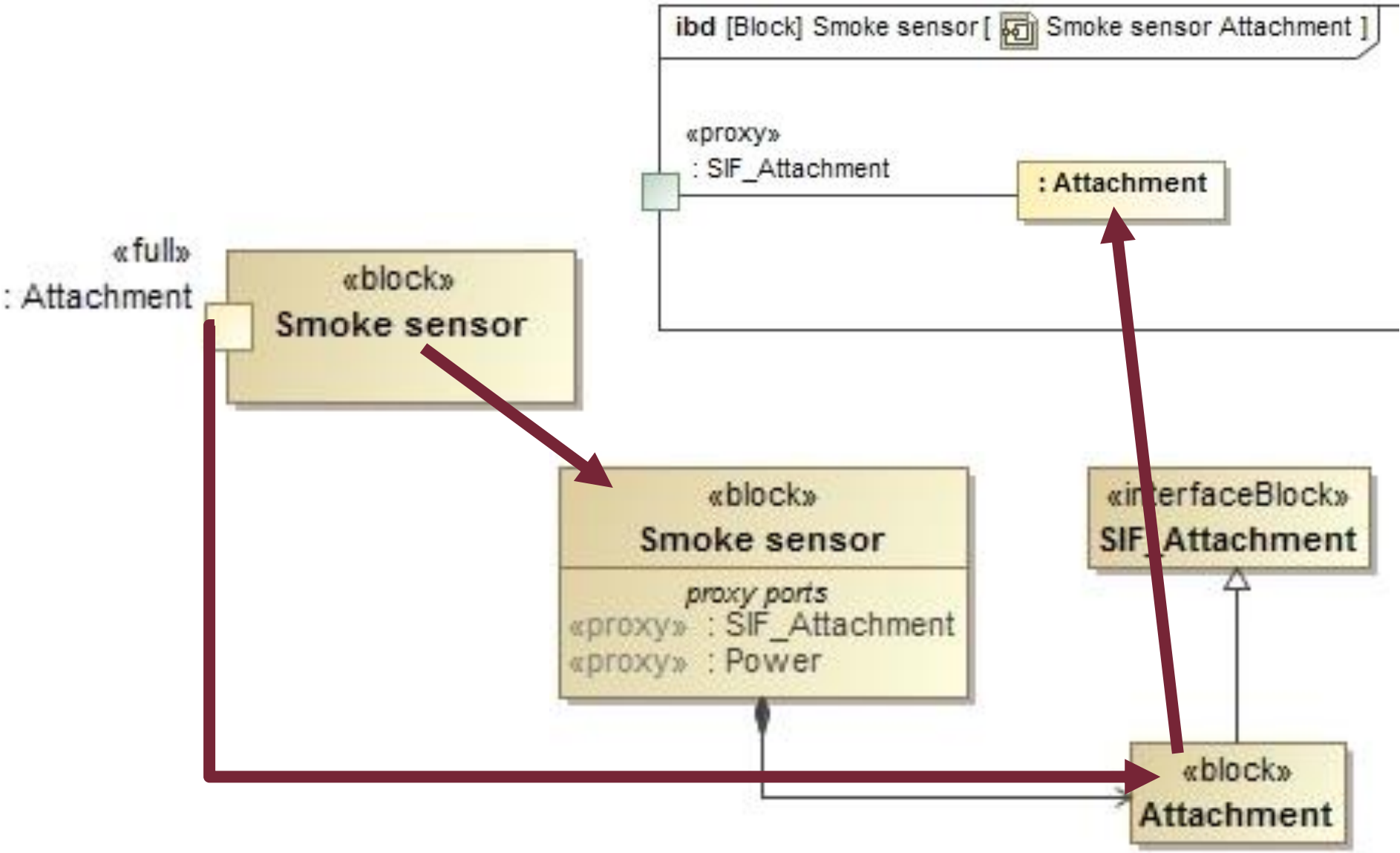

Nested ports

- (Full) Ports can also have other ports
- Examples
  - a separate port for configuring the behaviour of the port

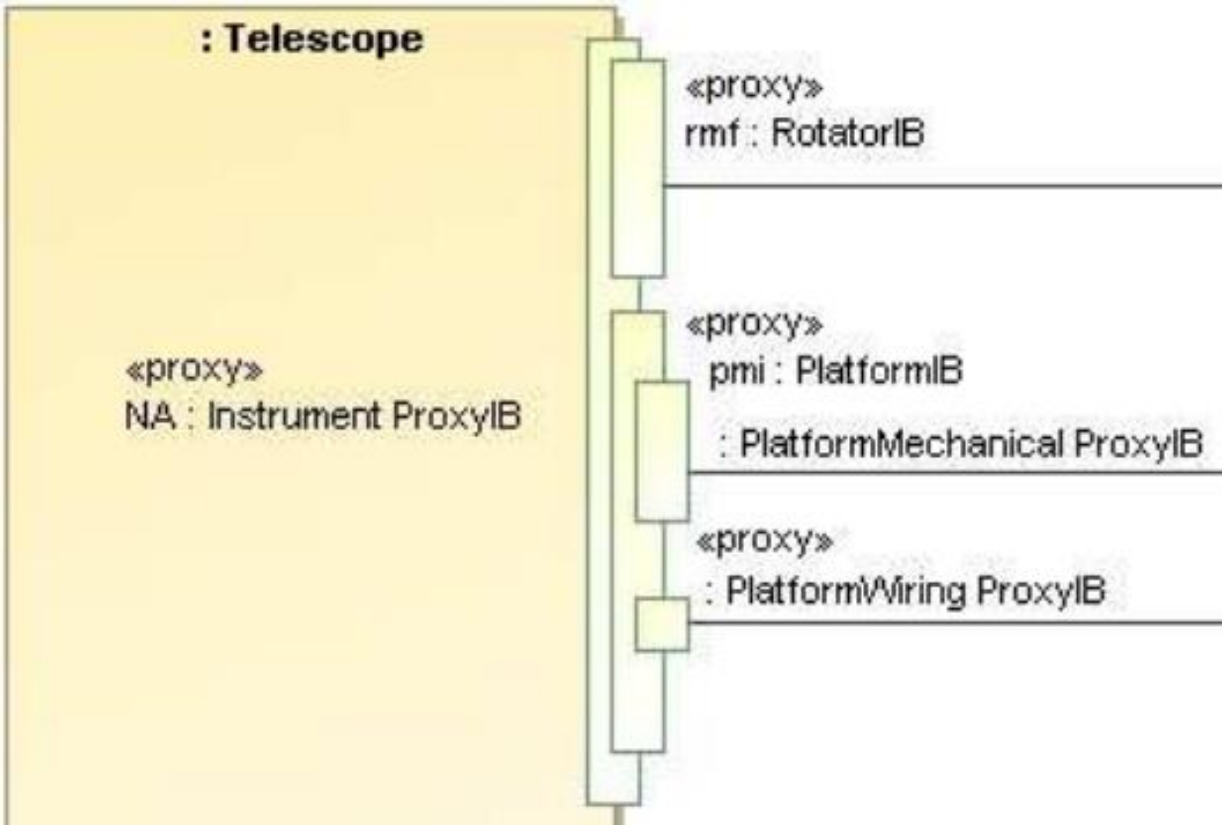

Interface vs. Interface Block

- **Interface**
  - A contract between two or more parties
    - Syntactic (elements) **and** semantic (constraints)
  - May be realized by blocks or their ports
    - (Although ports are also typed by blocks)
  - **Not only** software interfaces
    - Emphasis is not on operations
    - Semantics are more important
- **Interface block**
  - Special block typing *proxy ports*
  - Does not have internal parts or behavior

Summary

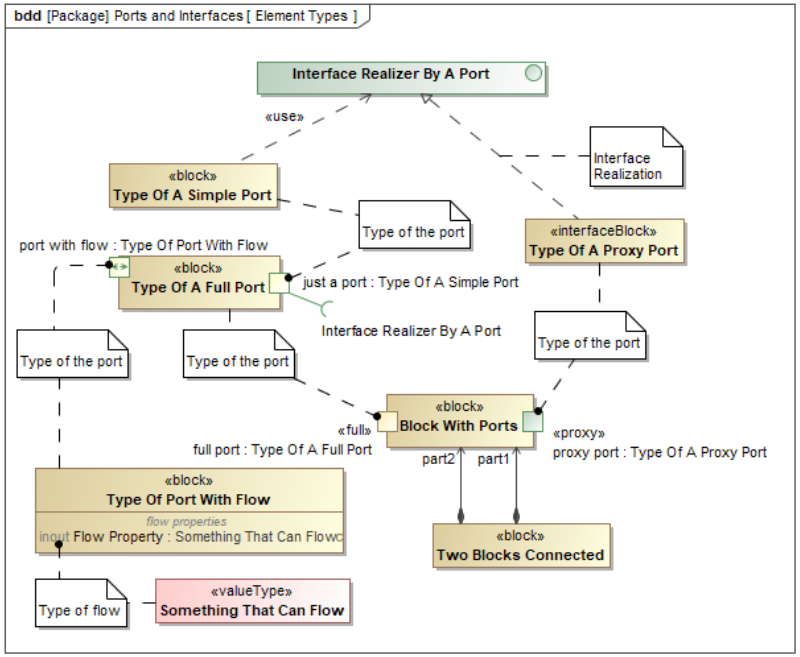

- Concepts:
  - Port
    - Standard, proxy, full, flow
  - Interface
  - Interface realization and use
  - Provided and required interface
  - Interface Block
  - Nested ports

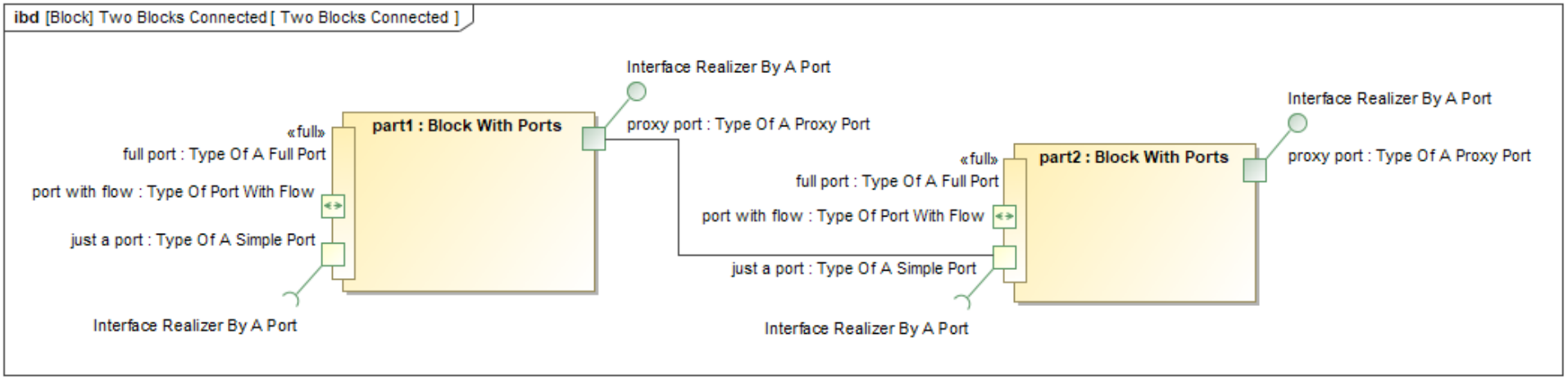

Summary

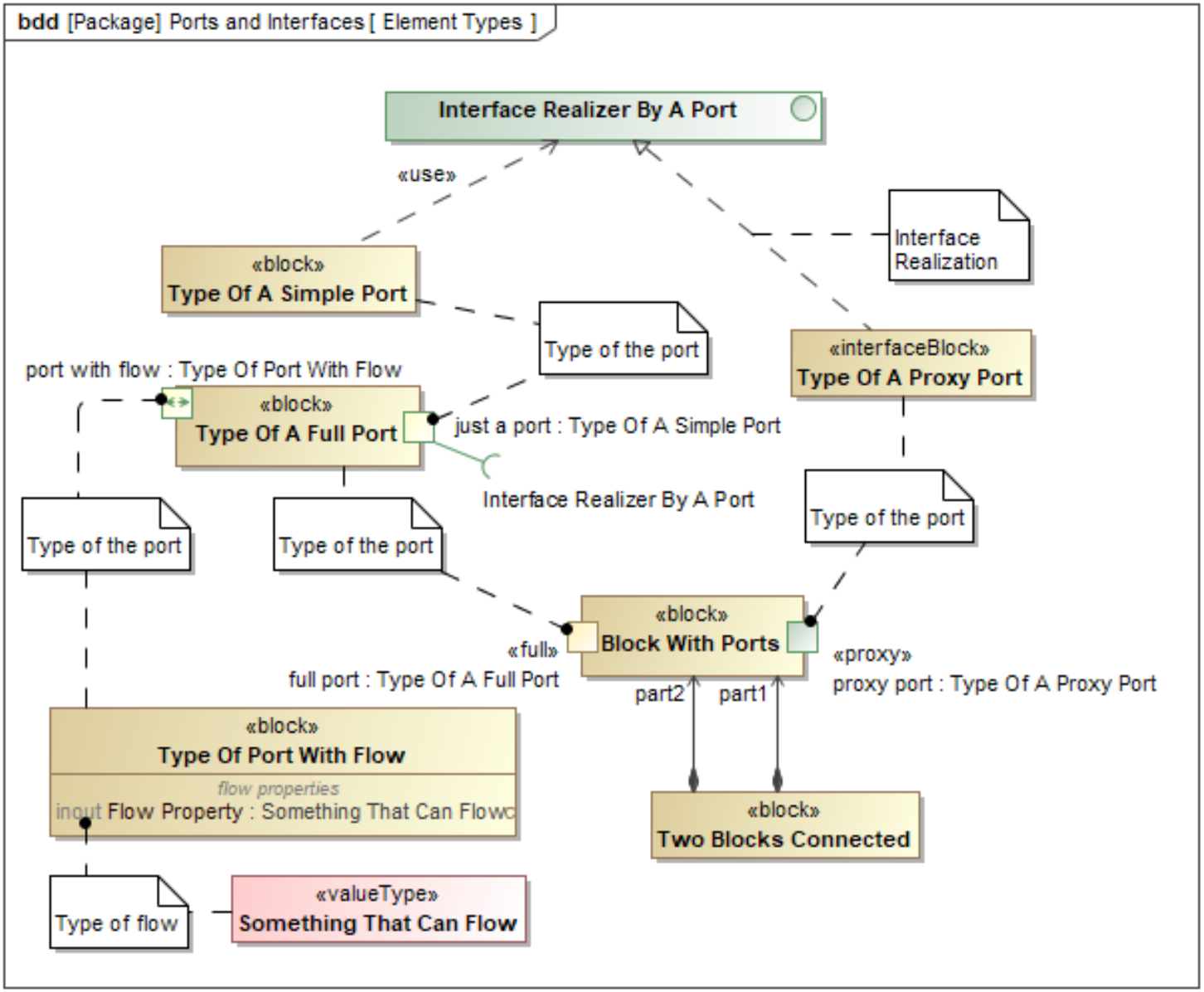
bdd [Package] Ports and Interfaces [Element Types]
Interface Realizer By A Port
«use»
Interface Realization
«block»
Type Of A Simple Port
Type of the port
«interfaceBlock»
Type Of A Proxy Port
port with flow : Type Of Port With Flow
«block»
Type Of A Full Port
just a port : Type Of A Simple Port
Interface Realizer By A Port
Type of the port
Type of the port
Type of the port
«block»
Block With Ports
«full»
full port : Type Of A Full Port
«proxy»
proxy port : Type Of A Proxy Port
part2
part1
«block»
Type Of Port With Flow
flow properties
inout Flow Property : Something That Can Flow
«block»
Two Blocks Connected
Type of flow
«valueType»
Something That Can Flow

Summary

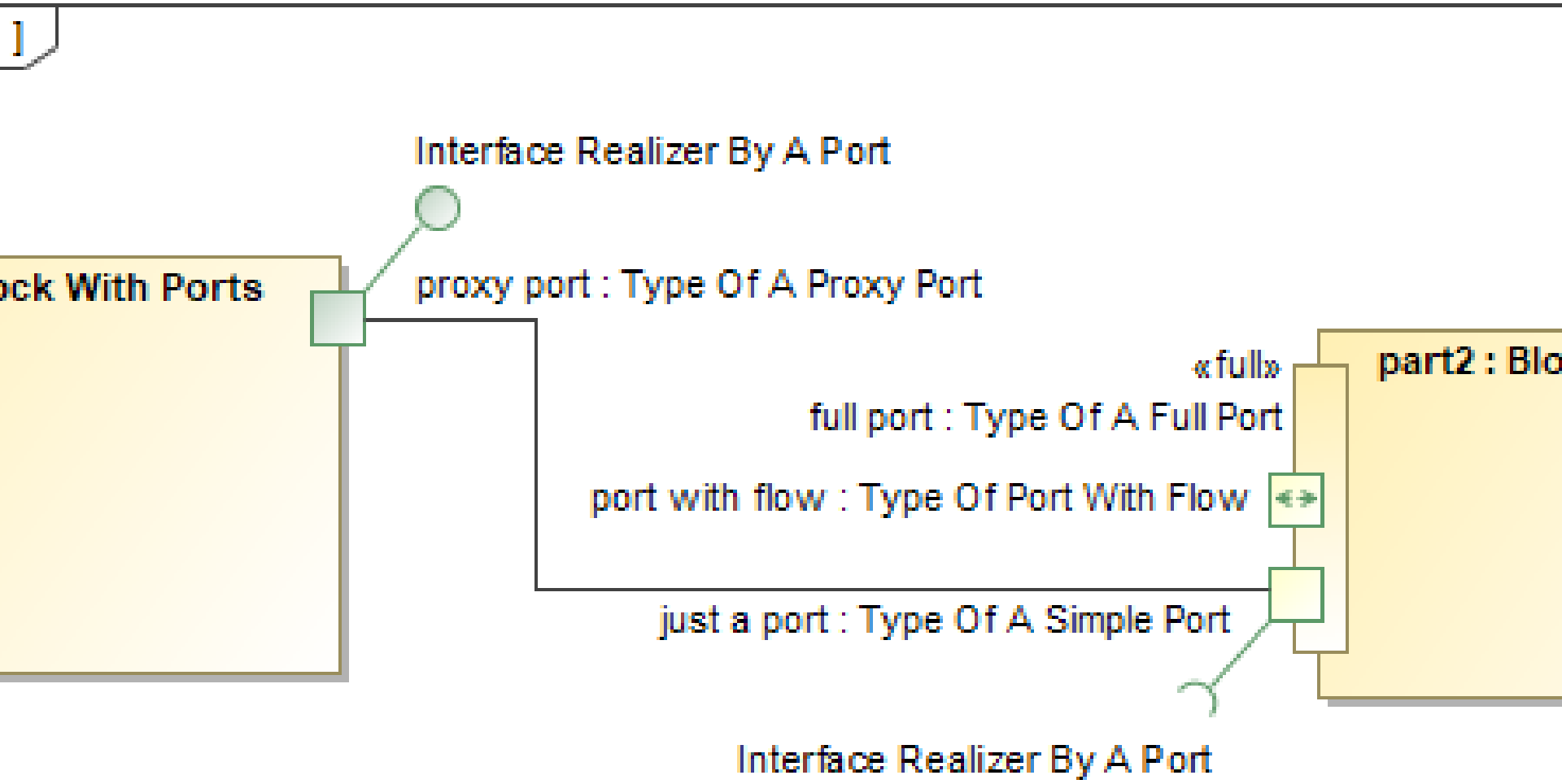
]
Interface Realizer By A Port
ock With Ports
proxy port : Type Of A Proxy Port
«full»
part2 : Blo
full port : Type Of A Full Port
port with flow : Type Of Port With Flow
just a port : Type Of A Simple Port
Interface Realizer By A Port

Reasons to Use Ports

Reasons to Use Ports 1

- Bottom-up method
  - Problem: specify how a designed component can be used in a context
    - A solution would be to realize or require an interface
  - Ports provide better abstraction
    - Interface can be specific to the port, not the block
    - Multiple ports

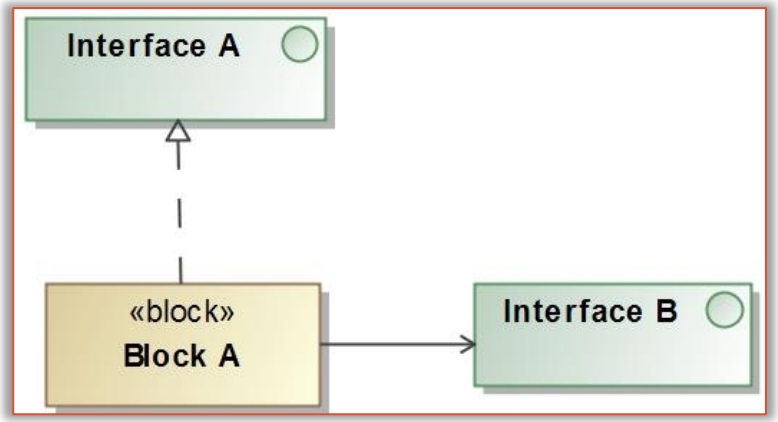

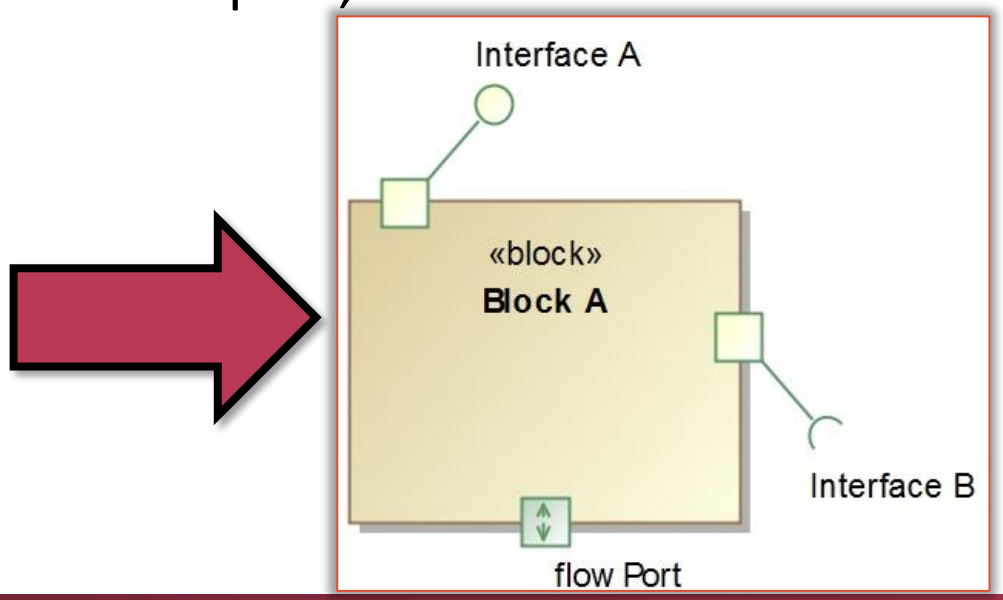

Reasons to Use Ports 2

- Top-down method
  - Problem: connections are not detailed enough and need to be refined
  - Ports can be used to refine connections iteratively

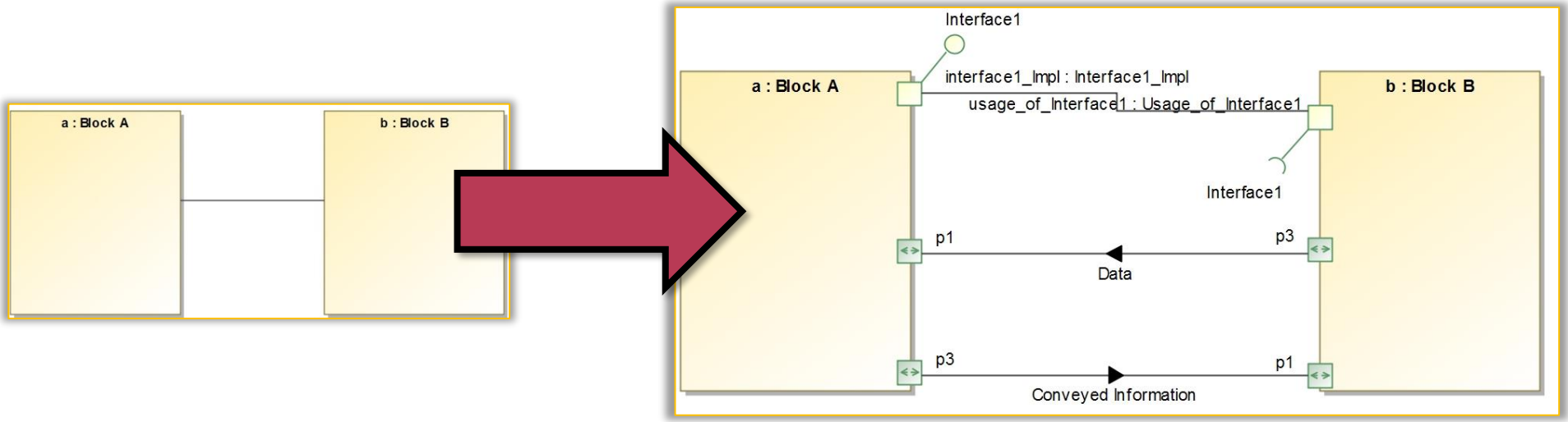

Reasons to Use Ports 3

- Encapsulation
  - Problem: connections that cross the block boundary may reduce maintainability
  - Use ports to hide the internal structure of a block

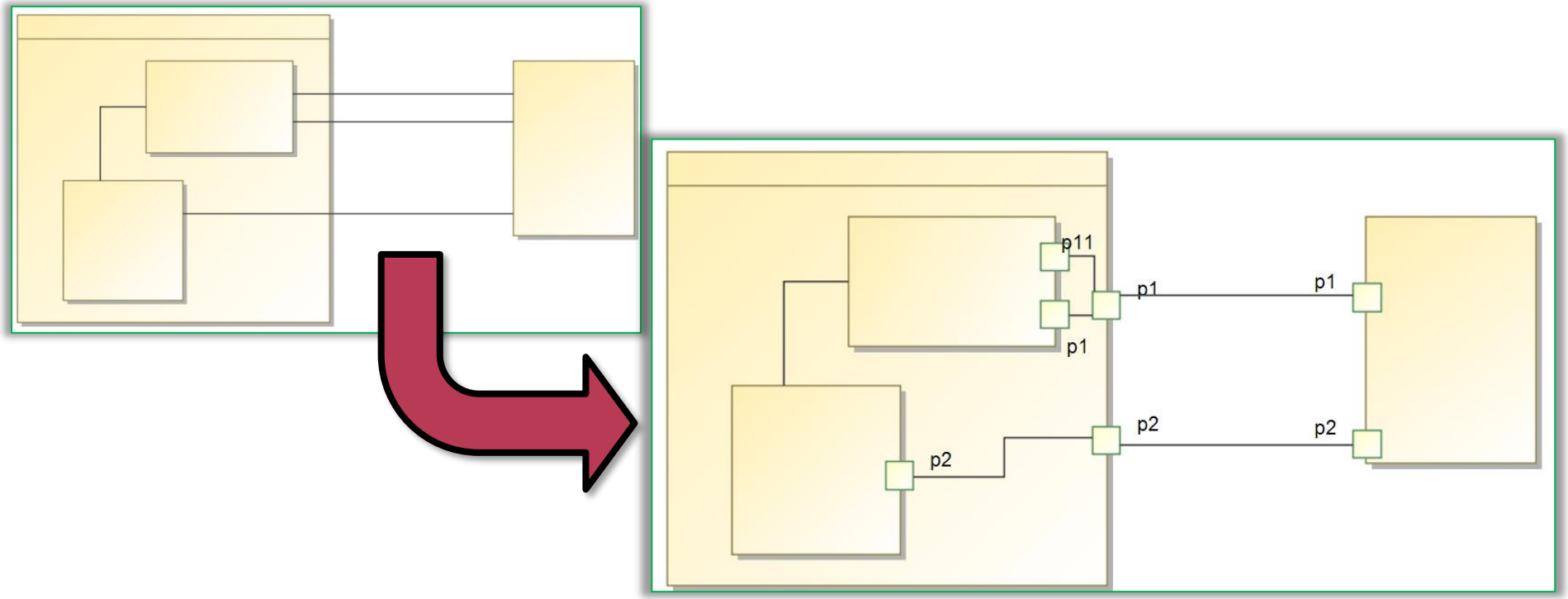

Reasons to Use Ports 4

- Interaction point has a special role
  - Problem: the block has a physical connection point (like AC power socket/plug) or a distinguished behaviour
  - Ports can be typed by a block with its own properties and behaviour