Process and data flow modeling

Systems Engineering BSc Course

Roots & Relations

- Flow-sheets and flow-charts are used everywhere...
  - Brainstorming
  - Computer algorithms
  - Business processes

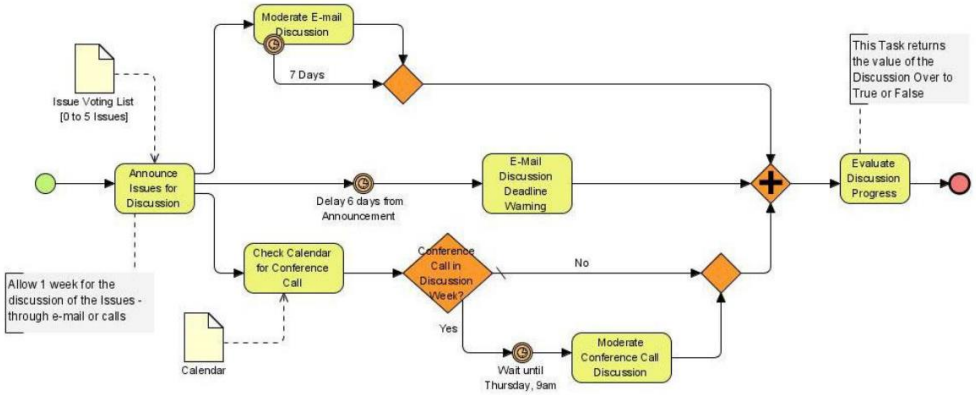

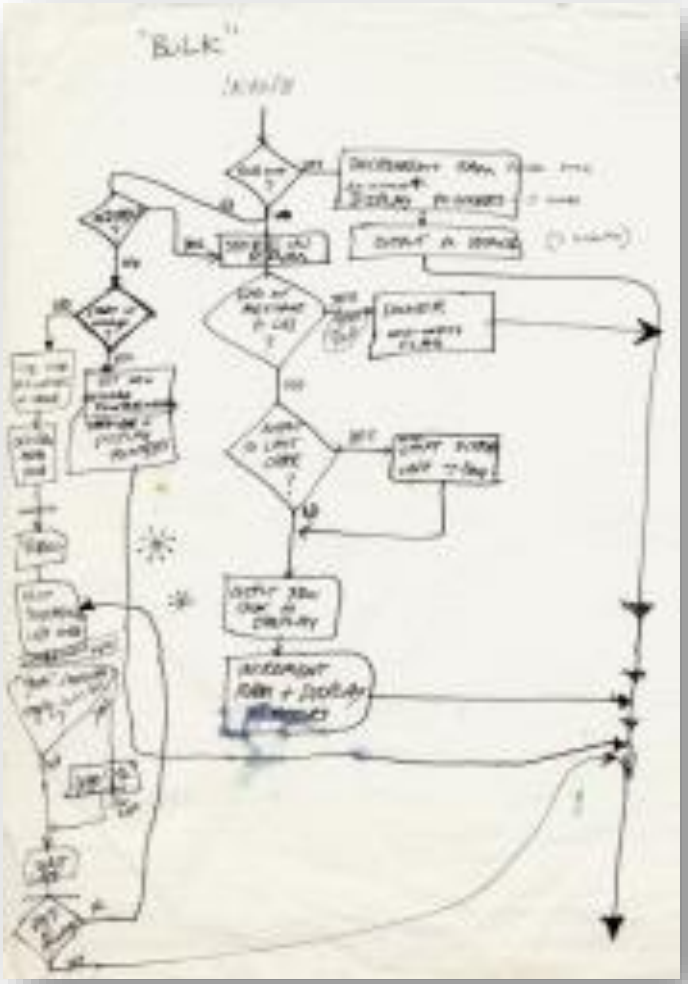

Platform-based systems design

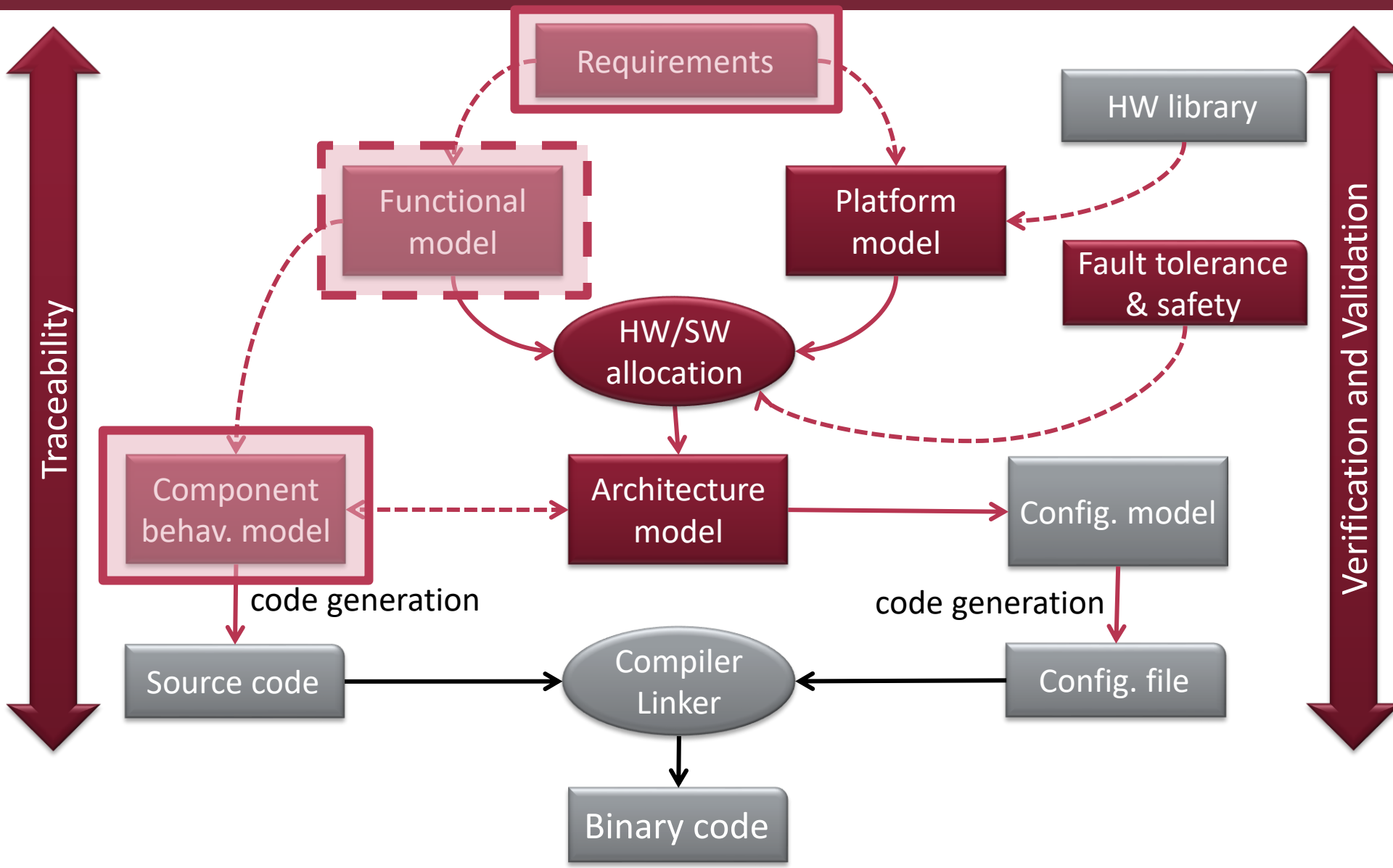

Learning Objectives

Process modeling

Understand the basic blocks control and data flow modeling
Identify the steps of, the data being used by and the logical flow of a process
Understand the syntactic building blocks of UML Activity Diagrams
Understand the semantics of UML Activity Diagrams
Use hierarchy to structure the models and express abstraction-refinement of actions
Build clean and expressive models by using best practices
Be able to use Activity Diagrams in high-level process modeling and low-level behavior modeling

PROCESS MODELING

Objectives

Main aspects

Objectives

- Transformation of **inputs to outputs** through a sequence of actions
- Model **control flow** and **data flow**

- Definition of **high-level** processes
  - Elaborate use cases
  - Functional decomposition
- Definition of **low-level** activities
  - Specific behavior executed at given points
    - E.g. reaction to an event

Main aspects

- **Atomic activities (Actions)**
  - An activity that is not detailed further
  - Depens on the level of abstraction
    - Use case
    - Informal description of some activity
    - Primitive operation (e.g. object access/update, messaging)
  - May be refined later (see Activity Decomposition)
- **Control flow**
  - Specifies the order in which activities can be executed
  - Also: **concurrency** and **exceptions**

Main aspects

- **Data flow**
  - Specifies the flow of data between activities
    - Where can a certain data element propagate?
  - Facilitates data flow analysis
    - …to reveal opportunities for optimization
    - …to avoid errors caused by improper data usage
- **Activity allocation**
  - Which functional block will execute an activity?
- **Activity decomposition**
  - Refine and/or reuse activities

UML/SYSML ACTIVITY DIAGRAM

Control flow

Activity refinement

Data flow

Allocation

Basic control flow – Atomic Activity

Compile

Basic control flow – Initial & Final node

Basic control flow – Sequence

Basic control flow – Decision & Merge

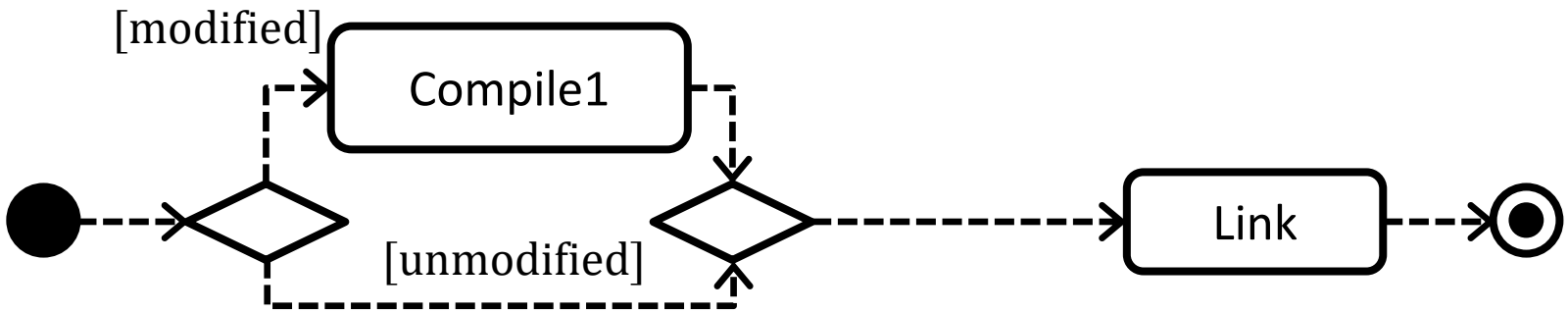

Basic control flow – Loop

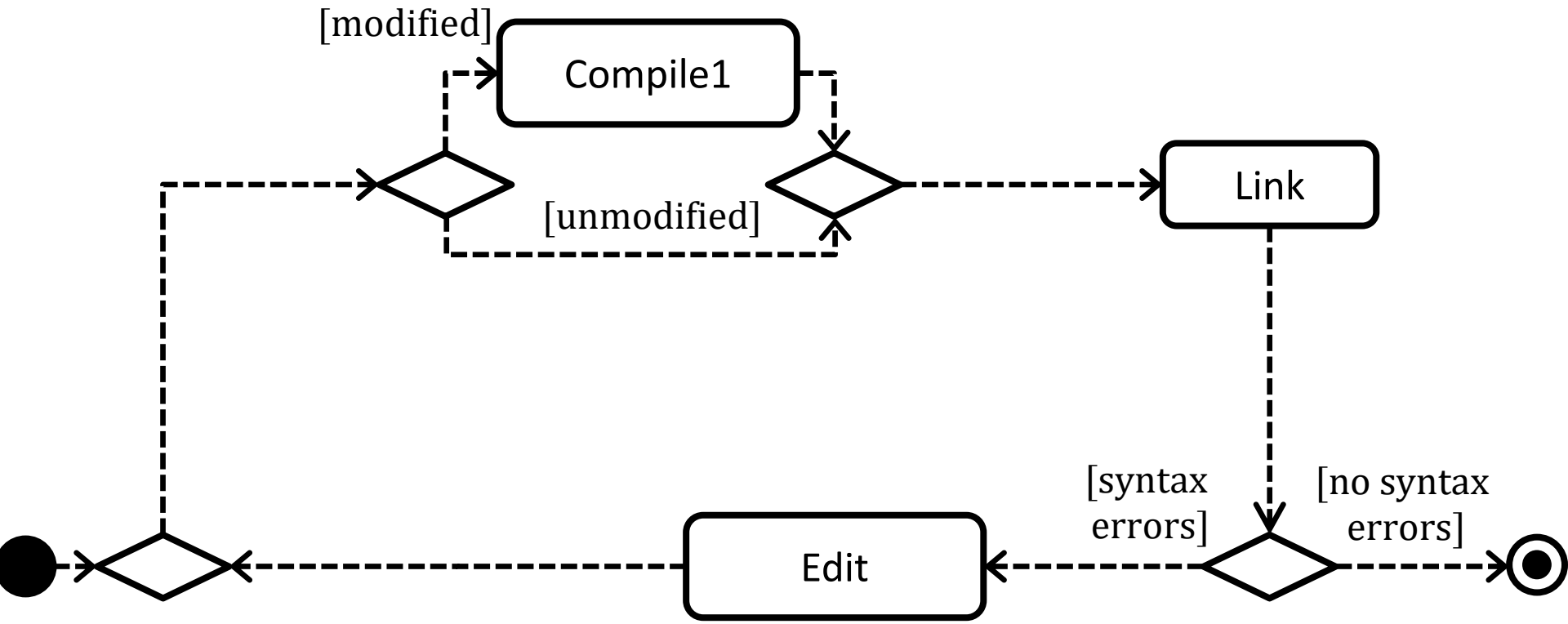

Basic control flow – Fork & Join

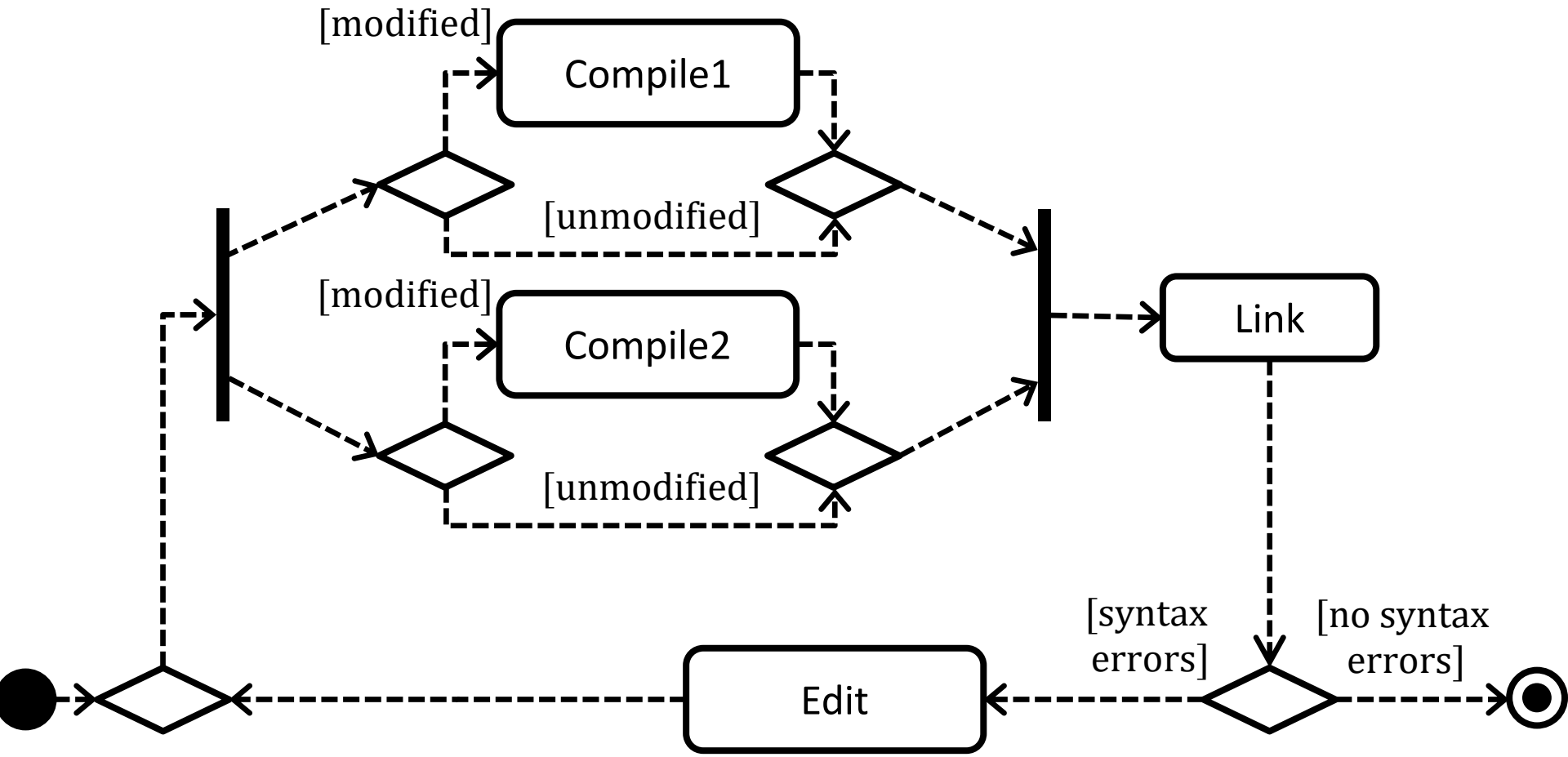

Activity refinement

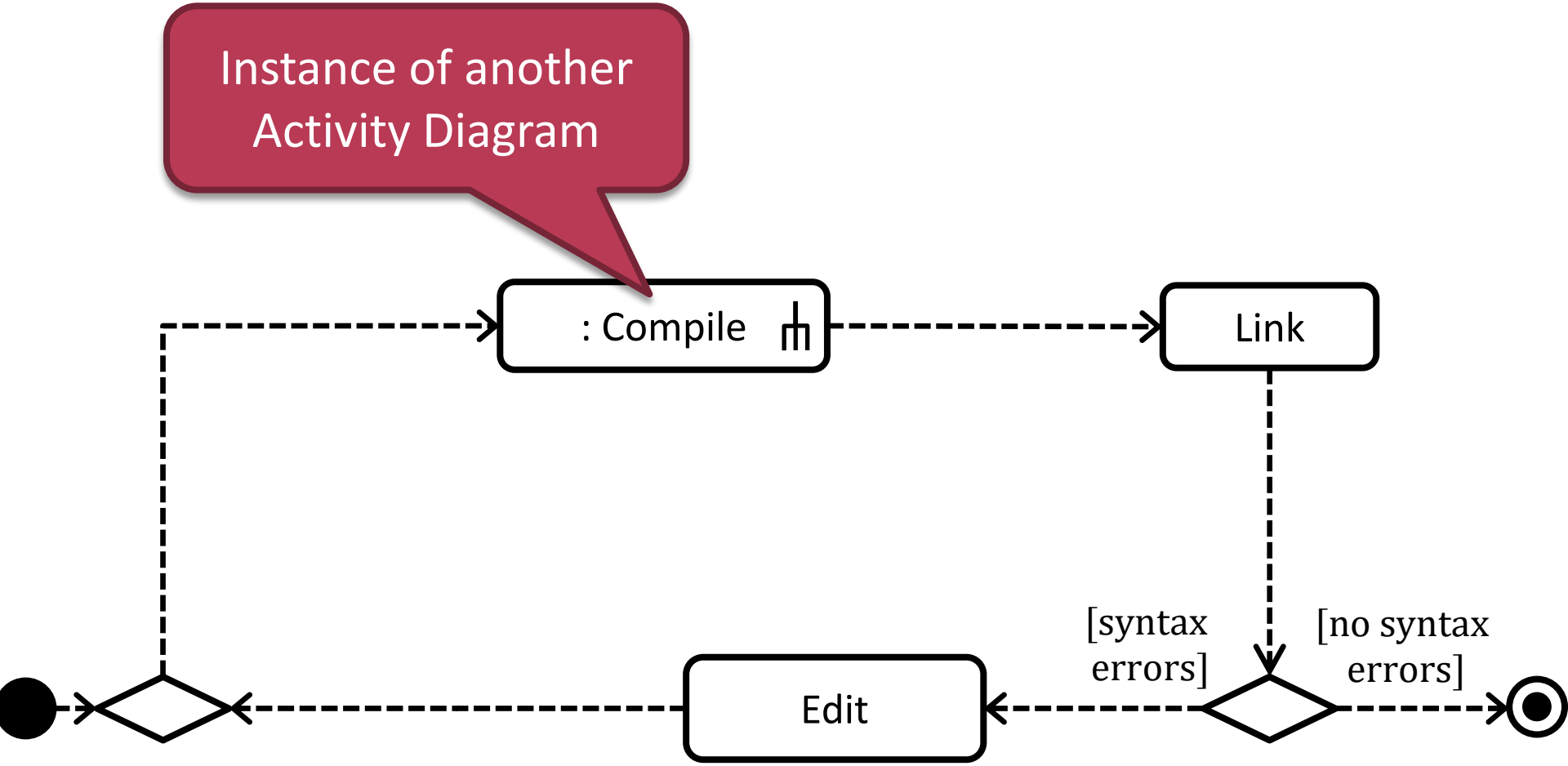

Activity refinement

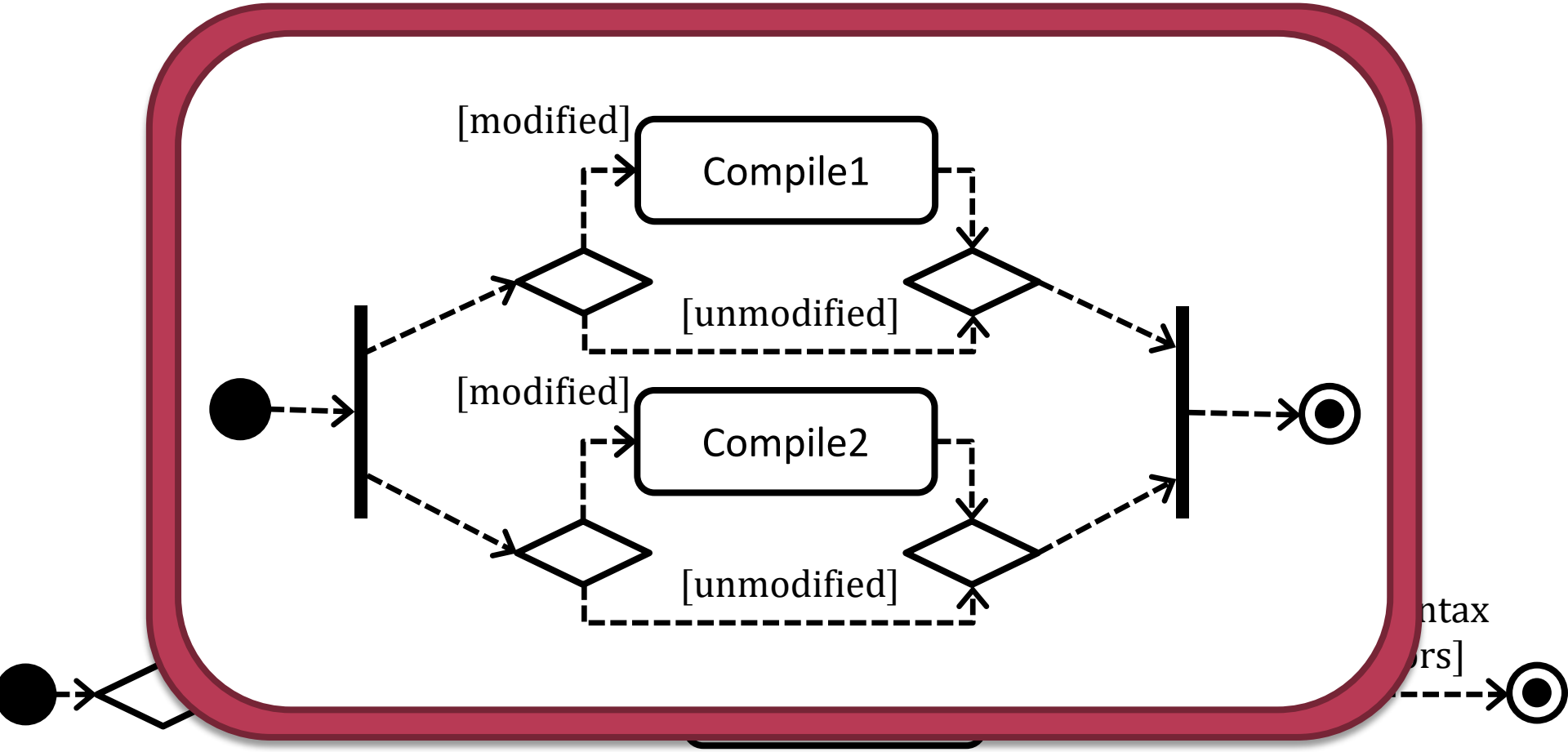

Basic control flow – Flow end

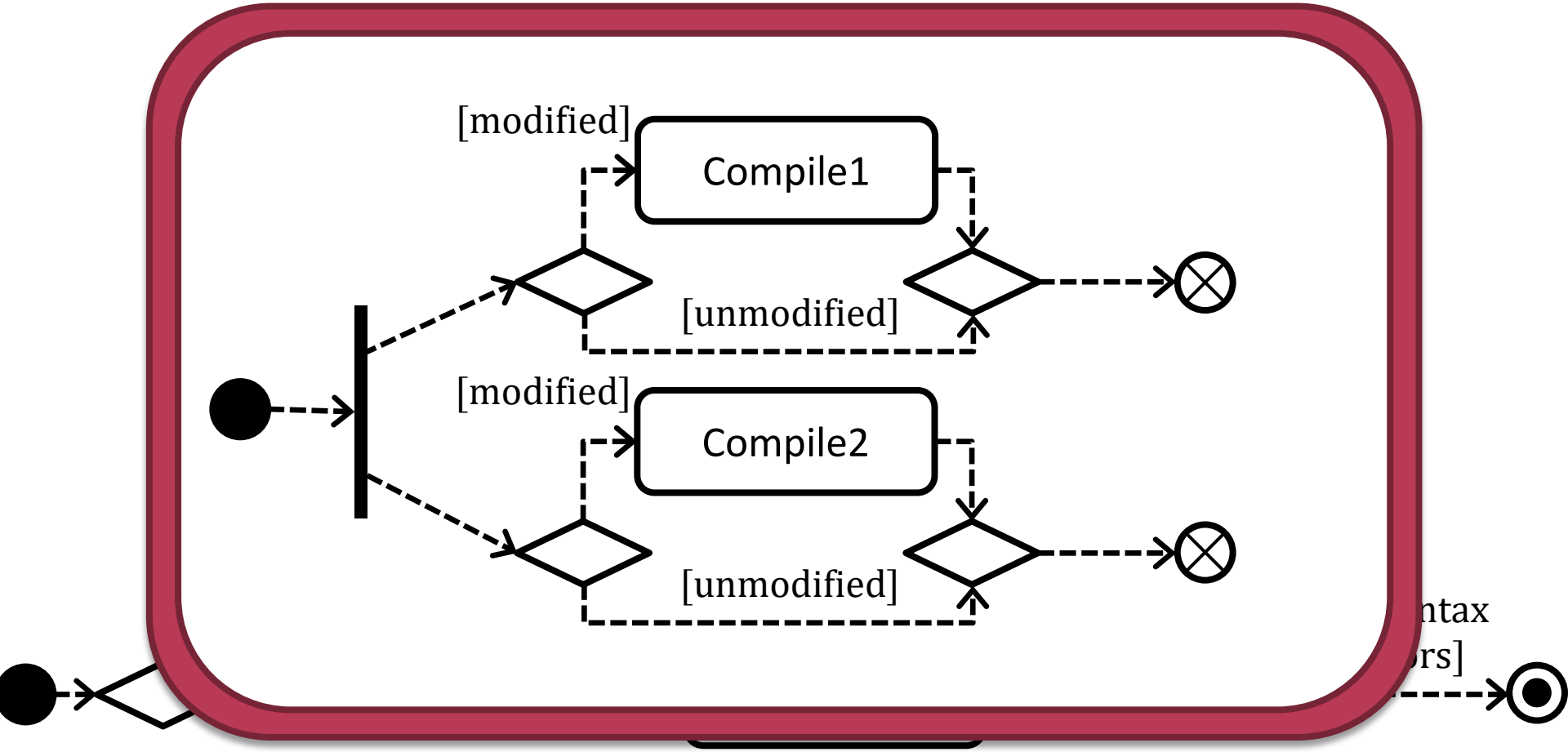

Modeling data flow

- Activities usually **consume and produce data**
  - Data can mean physical artifacts
  - The produced data can be an input for another activity
- Notation: **Input/Output pins**
  - Can have name and type
  - Data flow is denoted by **solid arrows**

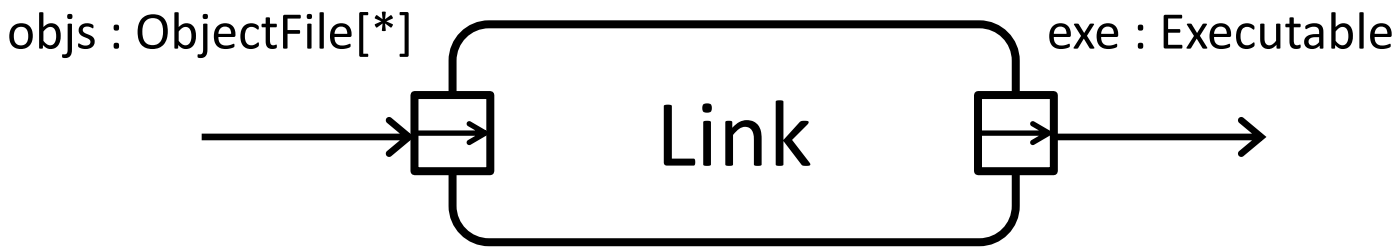

Modeling data flow

- An Activity can have **parameters**
  - **Parameter pins:** similar to Input/Output pins
  - Appear on the frame of an Activity Diagram

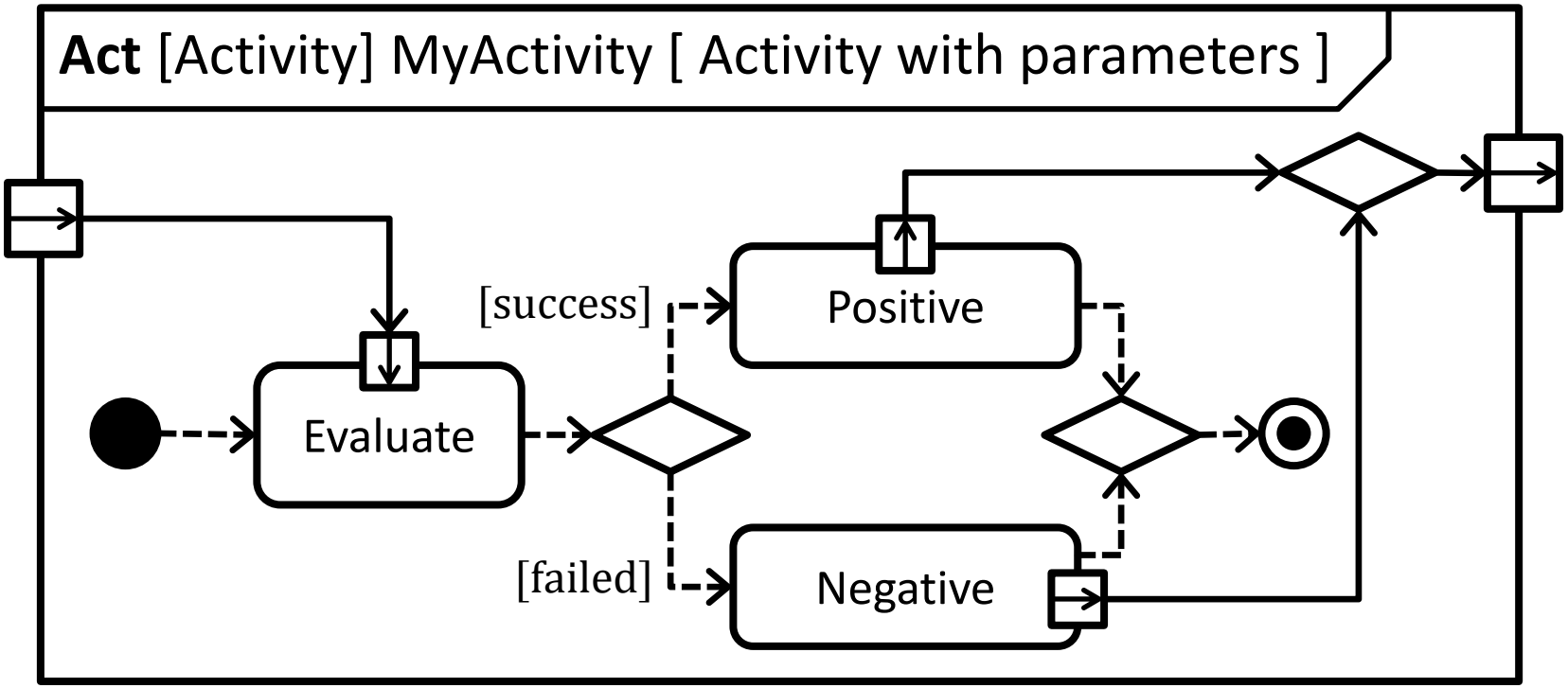

Exclusive/Shared data

- Output pins „emit” a **single data token**
  - Input pins connected to the same output pin **compete** for the data token

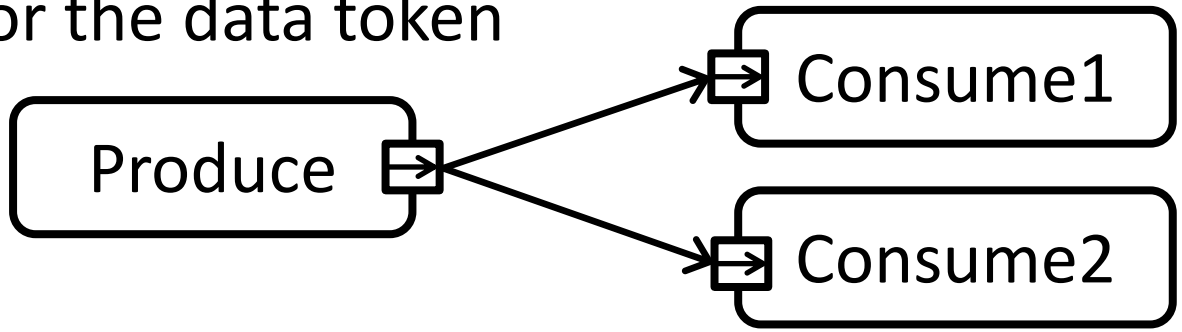

- Use a **fork** to replicate data tokens

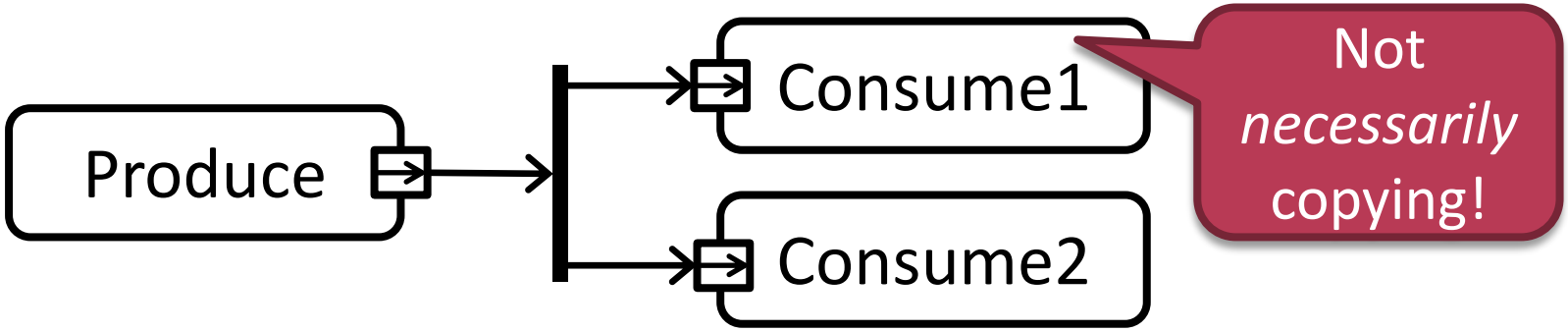

- See «centralBuffer» and «datastore» later

Control flow vs. Data flow

- **Data flow** denotes data dependencies
  - Some step **requires data** from another
- **Control flow** denotes control dependencies
  - Some step can be **executed only after** another

- Data flow can **substitute** control flow
  - Modeling control flow is not mandatory if there is a data flow between two actions
    - Still, it is sometimes useful to have them separately
    - Important exception in SysML: «stream»
  - Control flow can be regarded as a “void” data flow

More on data flows in SysML

- Normal inputs/outputs available only at start/end
- «stream» flows available throughout execution
  - «continuous» (e.g. water, etc.)
  - «discrete» (individual tokens)
    - rate = 4/sec

- Many more features…
  - Data constraint (e.g. object state) as pre/postcondition
  - Branch probabilities

Object node

- Use an **object node** to emphasize the flowing data

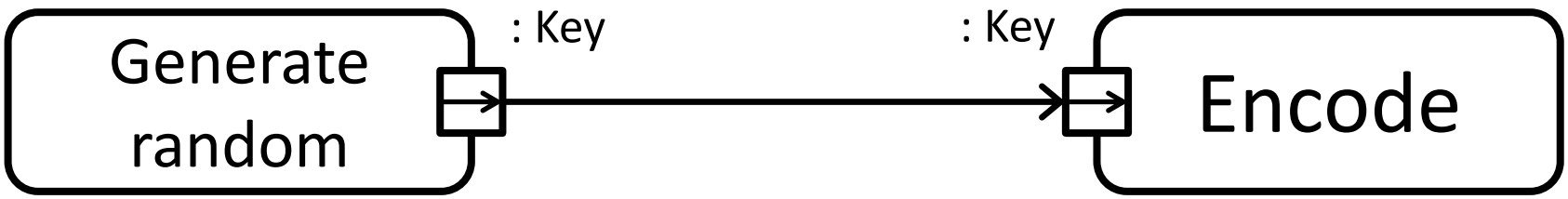

Object node

- Use an **object node** to emphasize the flowing data

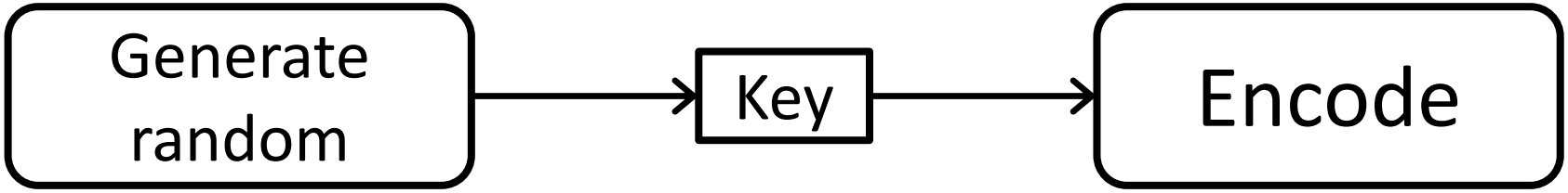

- Built-in object nodes in SysML (as stereotypes):
  - **Central buffer:**
    - Can model a message queue or pool (=**competition** for token)
    - Same behavior as an output pin, but not related to an action
  - **Datastore:**
    - Denotes a permanent storage (while parent is running)
    - Data tokens are stored and retrieved → tokens are **copied**

Atomic activities (Actions)

Primitive action	Primitive action	E.g. object access and update actions, *value specifications*, etc.
Send signal	signal, target, <Signal>	Send a signal to/through the specified block/ port.
Accept event	<Event1>, ..., data	Accepts incoming events. Typically outputs received data.
Accept time event	after(...)	Raised by the expiration of an (implicit) timer.
Call behavior	param, Call behavior, result	Executes another behavior (e.g. another Activity).

Atomic activities (Actions)

Primitive action	Primitive action	E.g. object access and update actions, *value specifications*, etc.
Send signal	signal, target, <Signal>	
Accept event	<Event1>, ..., data	Accepts incoming events. Typically outputs received data.
Accept time event	after(...)	Raised by the expiration of an (implicit) timer.
Call behavior	param, Call behavior, result	Executes another behavior (e.g. another Activity).

May also be an *OpaqueBehavior* (may contain a script)

Interruptible activity region

Interruptible activity region

- Specifies a part of the activity that will be interrupted if a certain event occurs
  - Control is transferred to an **exception handler**
    - + Some data regarding the event
  - Similar to a try-catch block

- Interrupt…?
  - **Not** in the sense of HW interrupts
    - See State Machines
  - Rather like **SIGINT**, execution of the region stops

Interruptible activity region

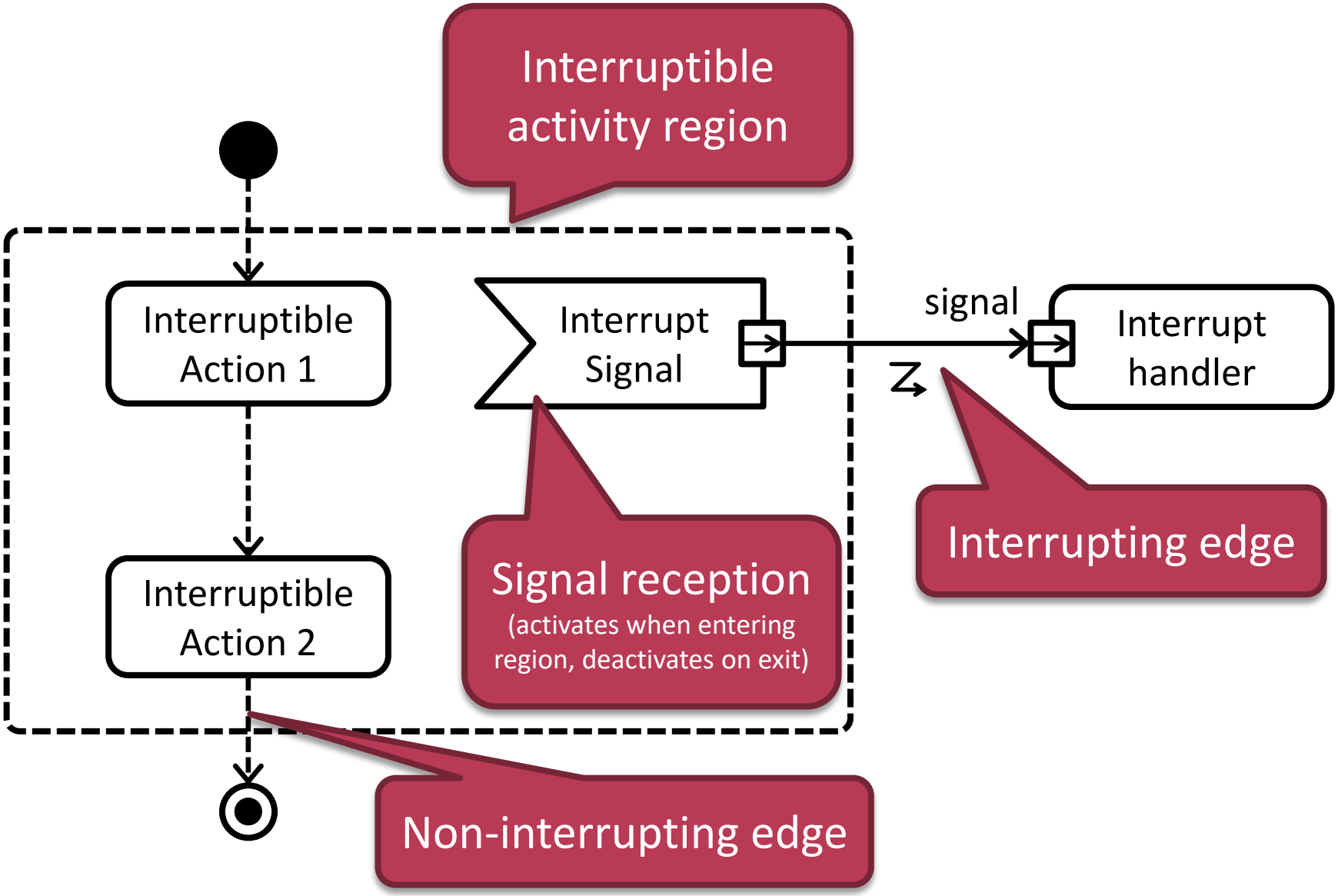

Allocation of Actions

- Actions can be allocated to blocks
  - *Which component executes the step?*

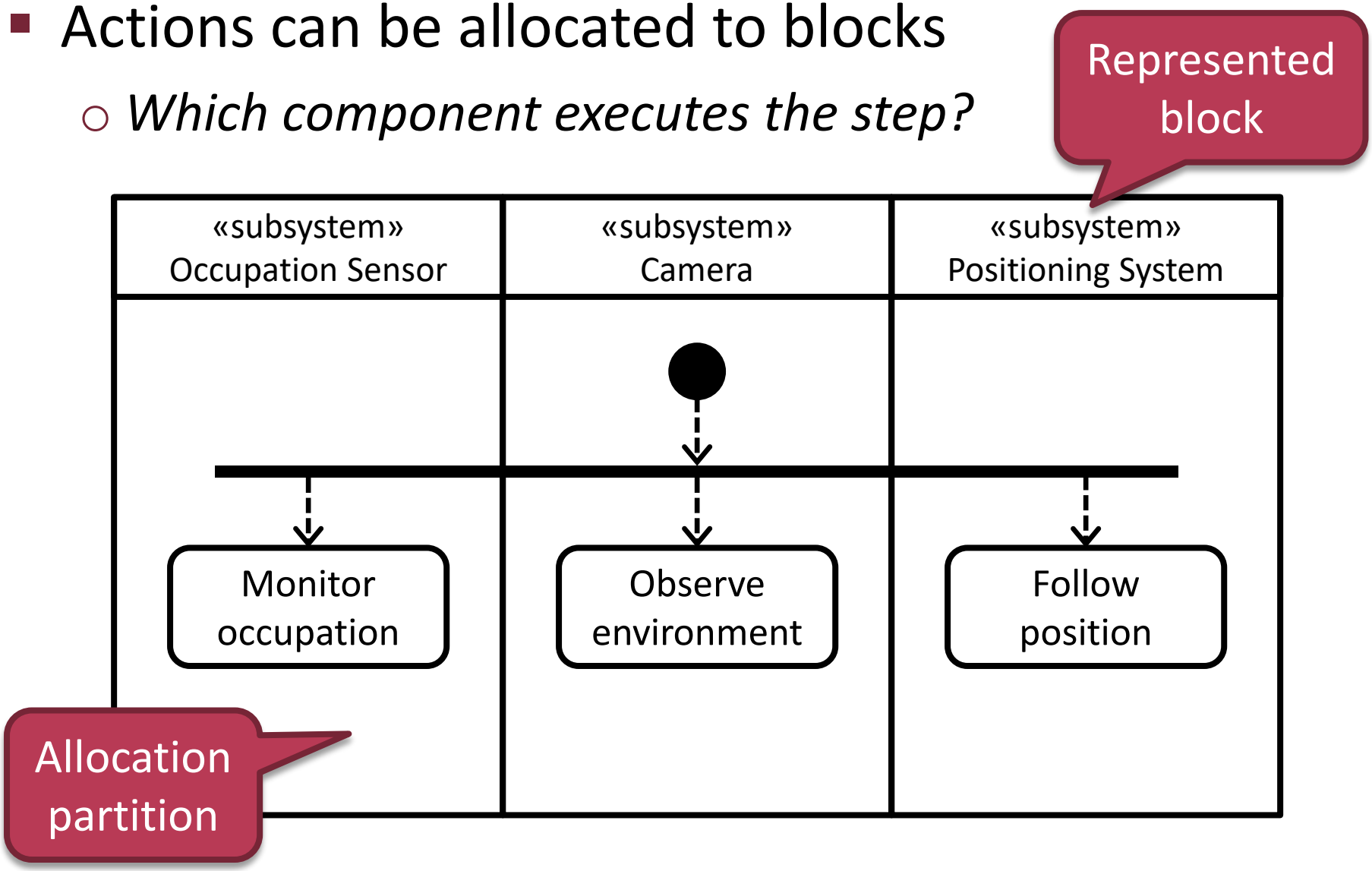

Summary

- **Atomic activities (Actions)**
  - Primitive actions
  - Send signal
  - Accept (time) event
  - Call behavior
- **Control flow**
  - Initial/Final node, Flow final
  - Decision & Merge
  - Fork & Join
  - Interruptible activity region

Summary

- **Data flow**
  - Input/Output pins
  - Parameter pins
  - Object nodes
- **Activity allocation**
  - Allocation partition
- **Activity decomposition**
  - Call behavior actions
  - Parameter pins

SEMANTICS

Tokens & Channels

Actions

Control structures

Tokens and Channels

- Represent the "*right to execute*" and data elements as **tokens**
  - **Data tokens** have type and value
  - **Control tokens** are typeless (like *void*)
- A channel is a **buffer** where tokens can be put to and read from
  - Usually FIFO (can be modified by stereotypes)
- What counts as a channel?

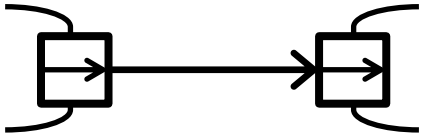

  - Output pin/Object node → Input pin/Object node
  - The buffer is "in" the starting point

Tokens and Channels

- Represent the "*right to execute*" and data elements as **tokens**
  - **Data tokens** have type and value
  - **Control tokens** are typeless (like *void*)
- A channel is a **buffer** where tokens can be put to and read from
  - Usually FIFO (can be modified by stereotypes)
- What counts as a channel?

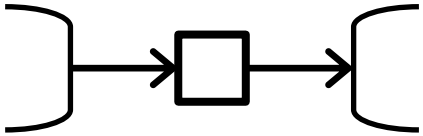

  - Output pin/Object node → Input pin/Object node
  - The buffer is "in" the starting point

Actions

- To execute (*fire*) an action, it needs
  - A **data token** on all of its input pins
    - **Type conformance:** argument type < parameter type
  - A **control token** from all incoming control flow connectors
  - \+ An incoming event in case of **"accept" actions**
  - Actions connected to the same output **compete** for the data/control token
- An executed (*fired*) action produces
  - A **control token** on all outgoing control flow connectors
  - A **data token** on all output pins
- Actions **deactivate** after execution
  - Except *accept event actions* <u>without inputs</u> **!**

Control structures

- **Initial node:**
  - **Produces** a control token when the Activity is invoked
- **Final node:**
  - **Removes all control tokens** and returns from the Activity
- **Flow final:**
  - **Consumes** a control token
- **Decision:**
  - Forwards incoming token to **selected output**
- **Merge:**
  - Forwards incoming token from **any input** to output

Control structures

- **Fork:**
  - Replicates incoming tokens on **all outputs** (not necessarily copy)
- **Join:**
  - **Waits for a *control* token on all inputs** then forwards one
  - **Waits for a *data* token on all inputs** then forwards **all**
  - Can be mixed: forwards **data tokens only**
- **Interruptible activity region:**
  - **Removes all control tokens** from region when interrupted
    - And deactivates *accept event actions*

Example: Process collected data

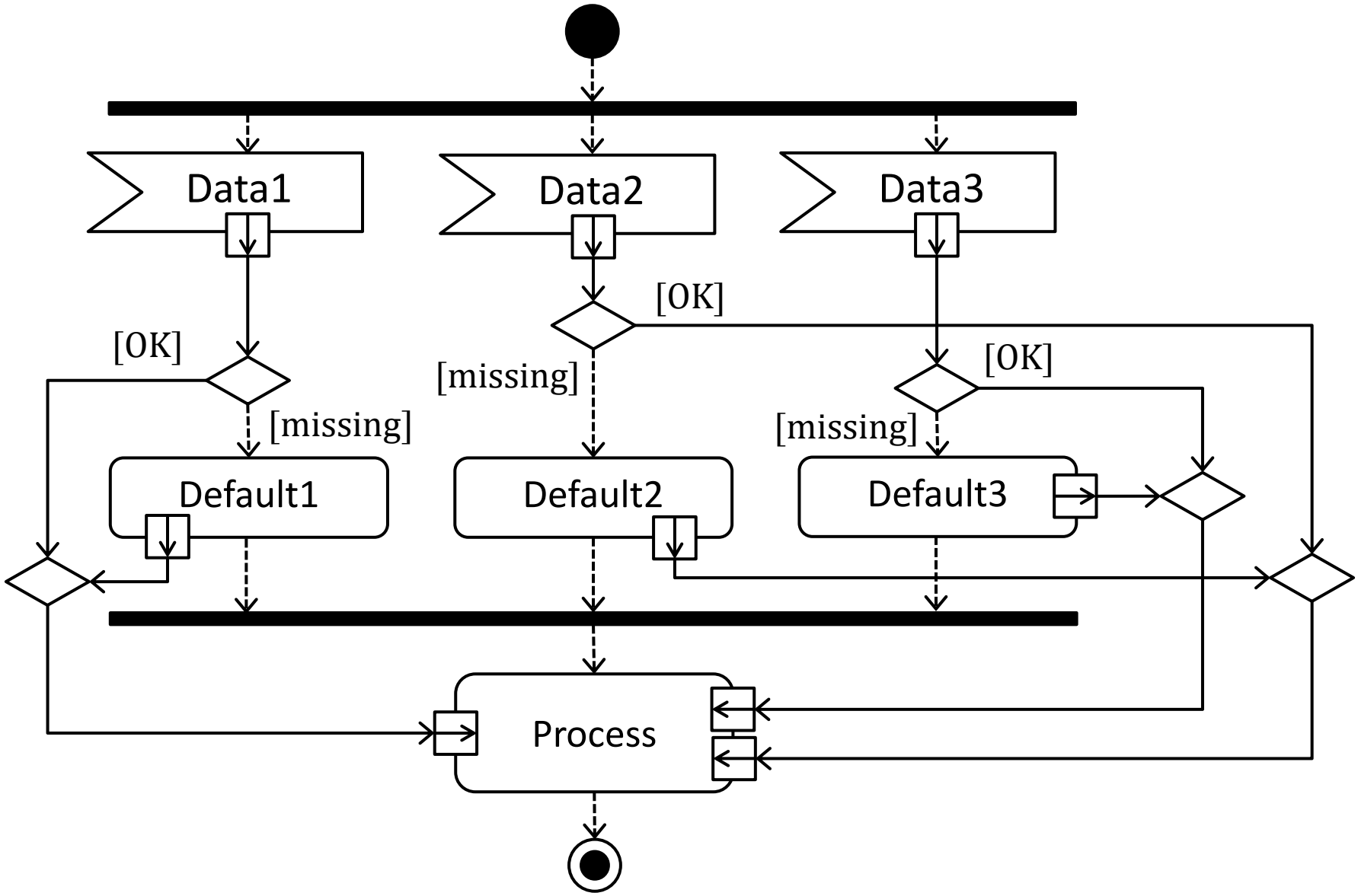

Example: Process collected data

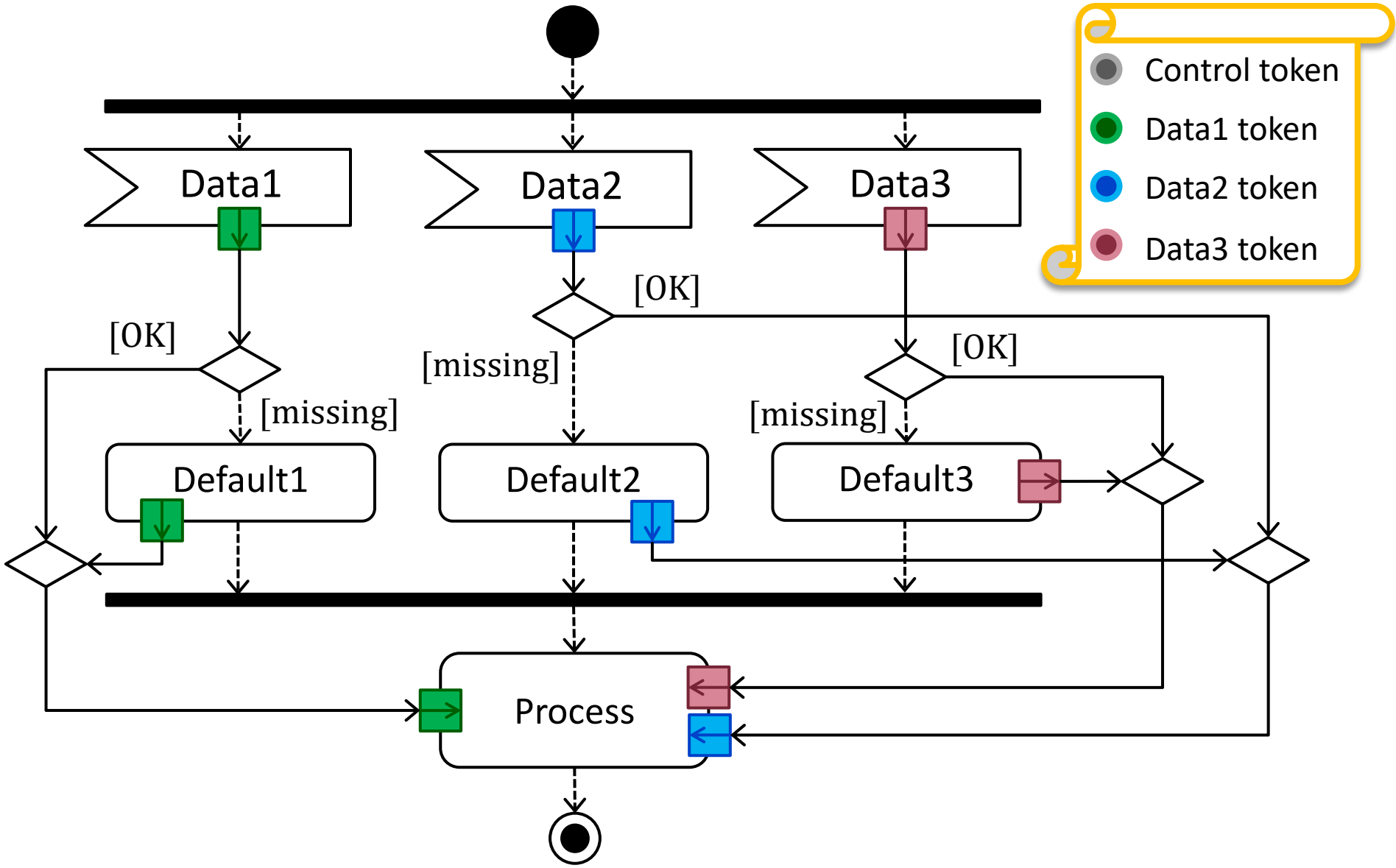

Example: Process collected data

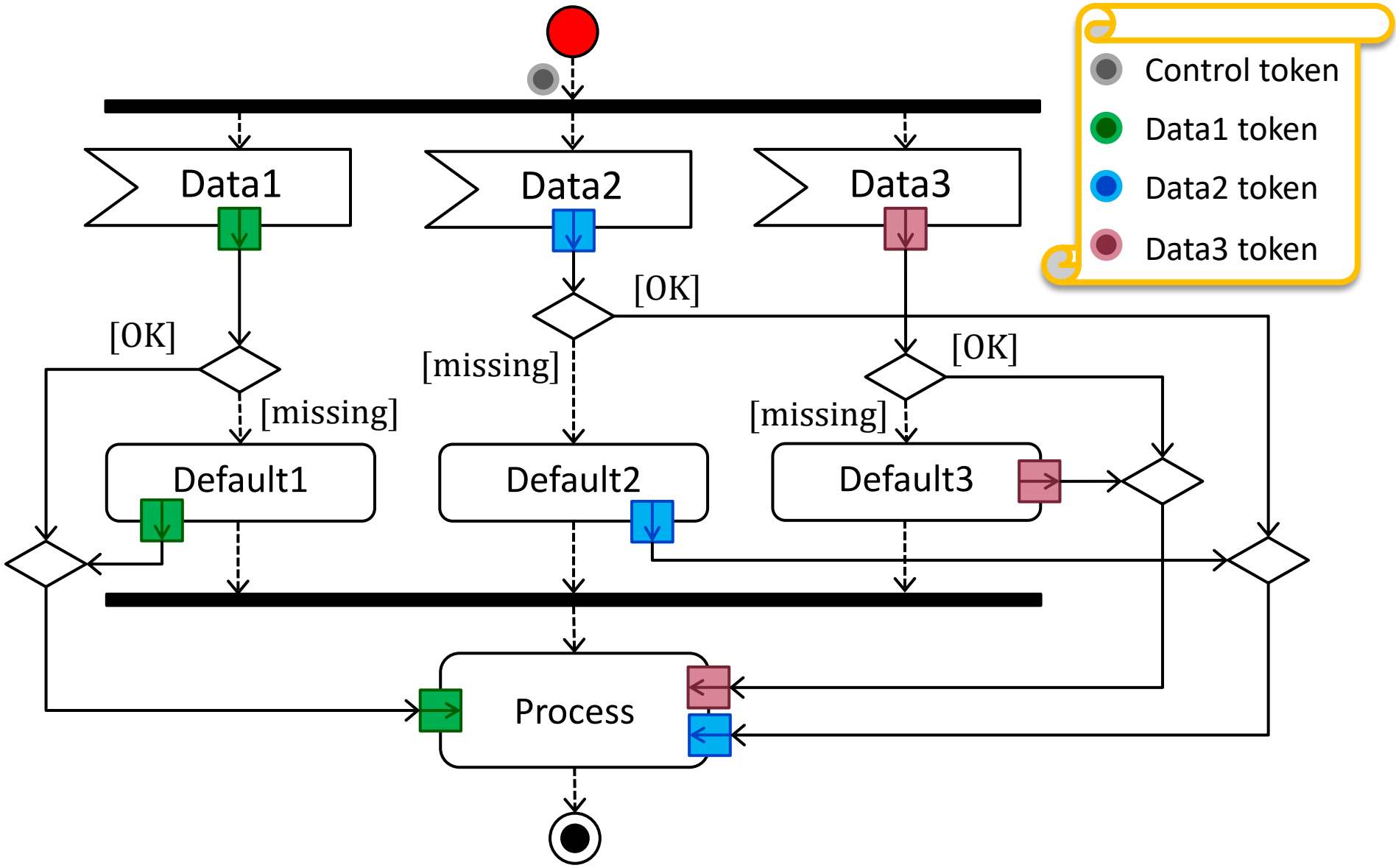

Example: Process collected data

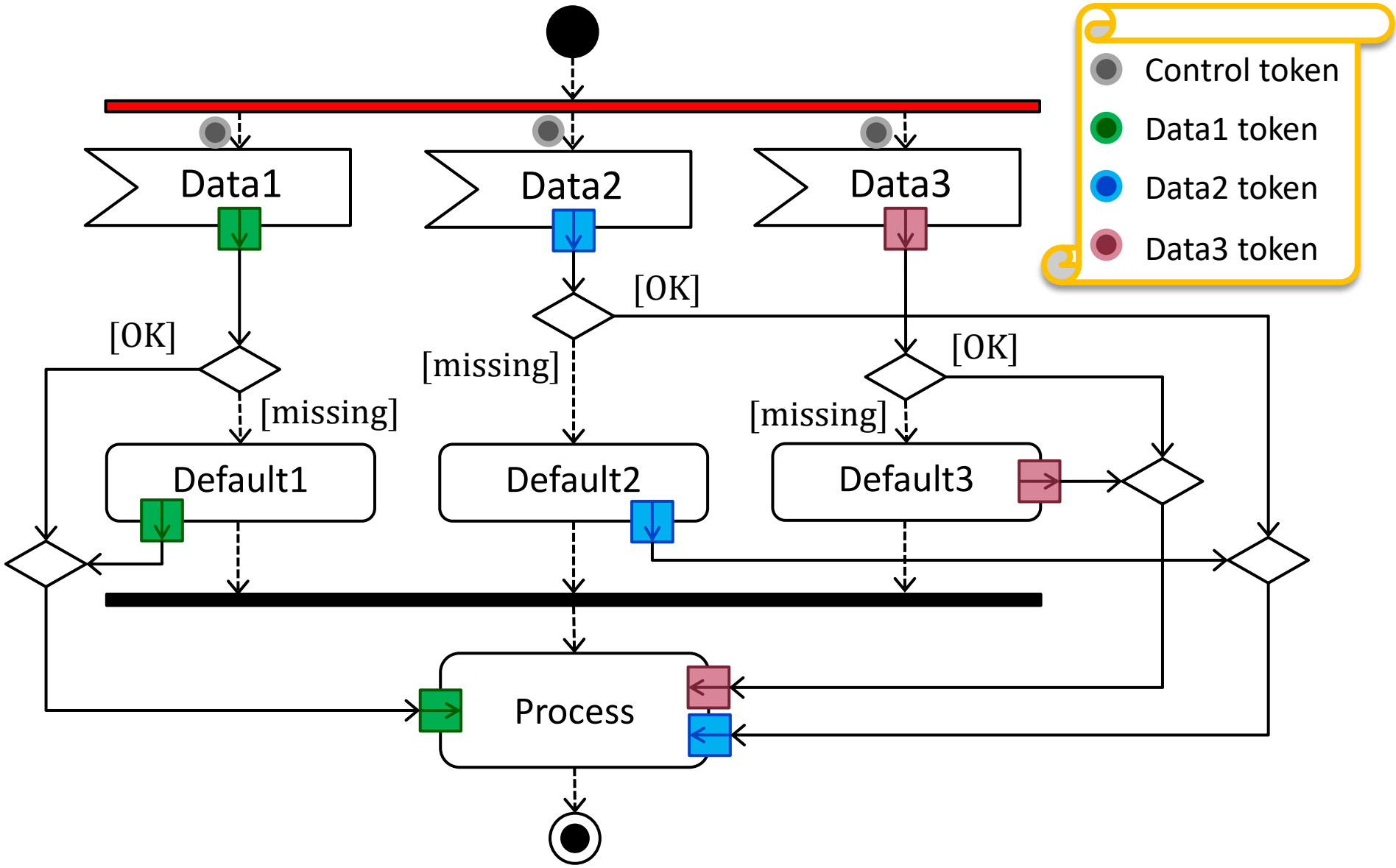

Example: Process collected data

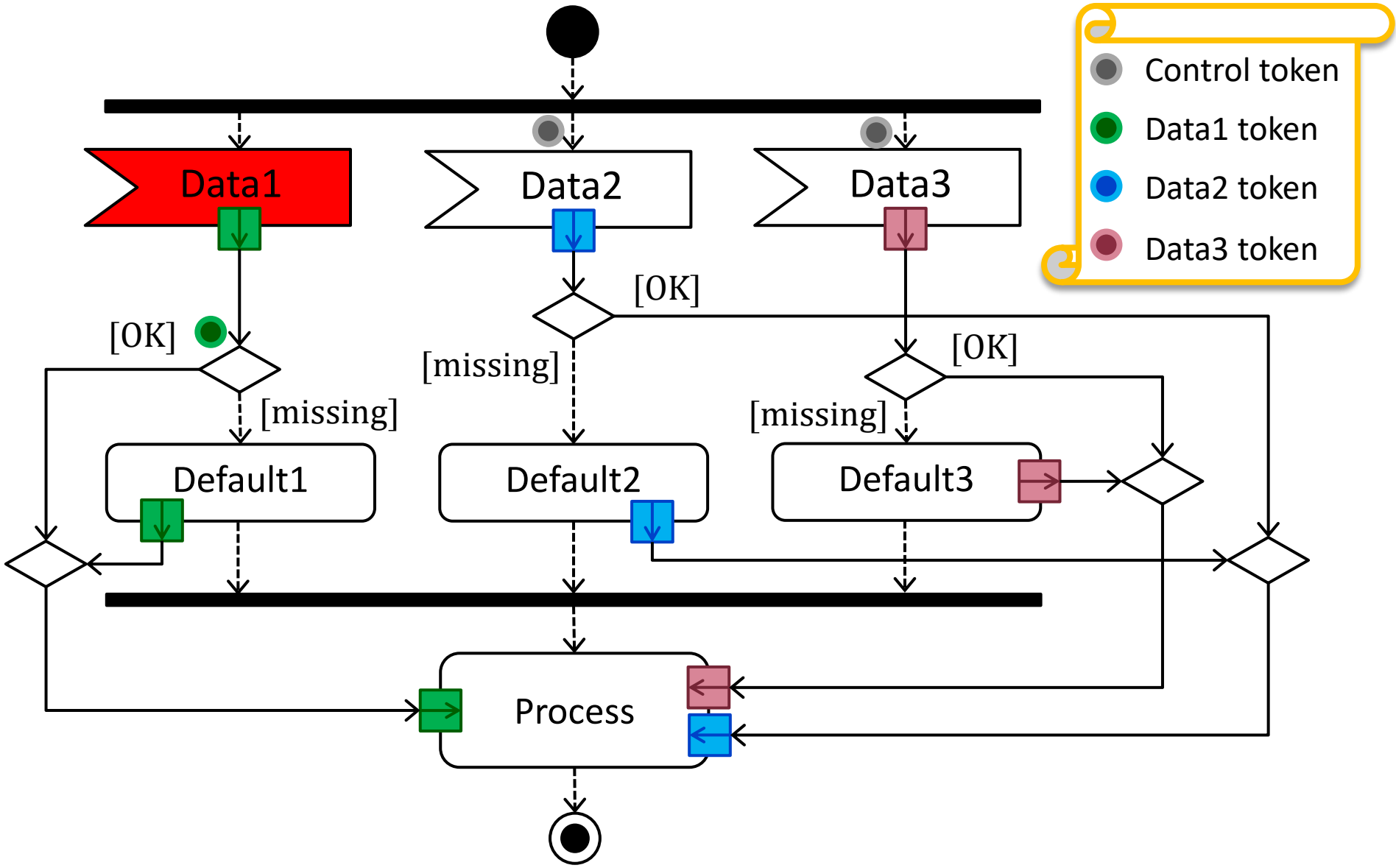

Example: Process collected data

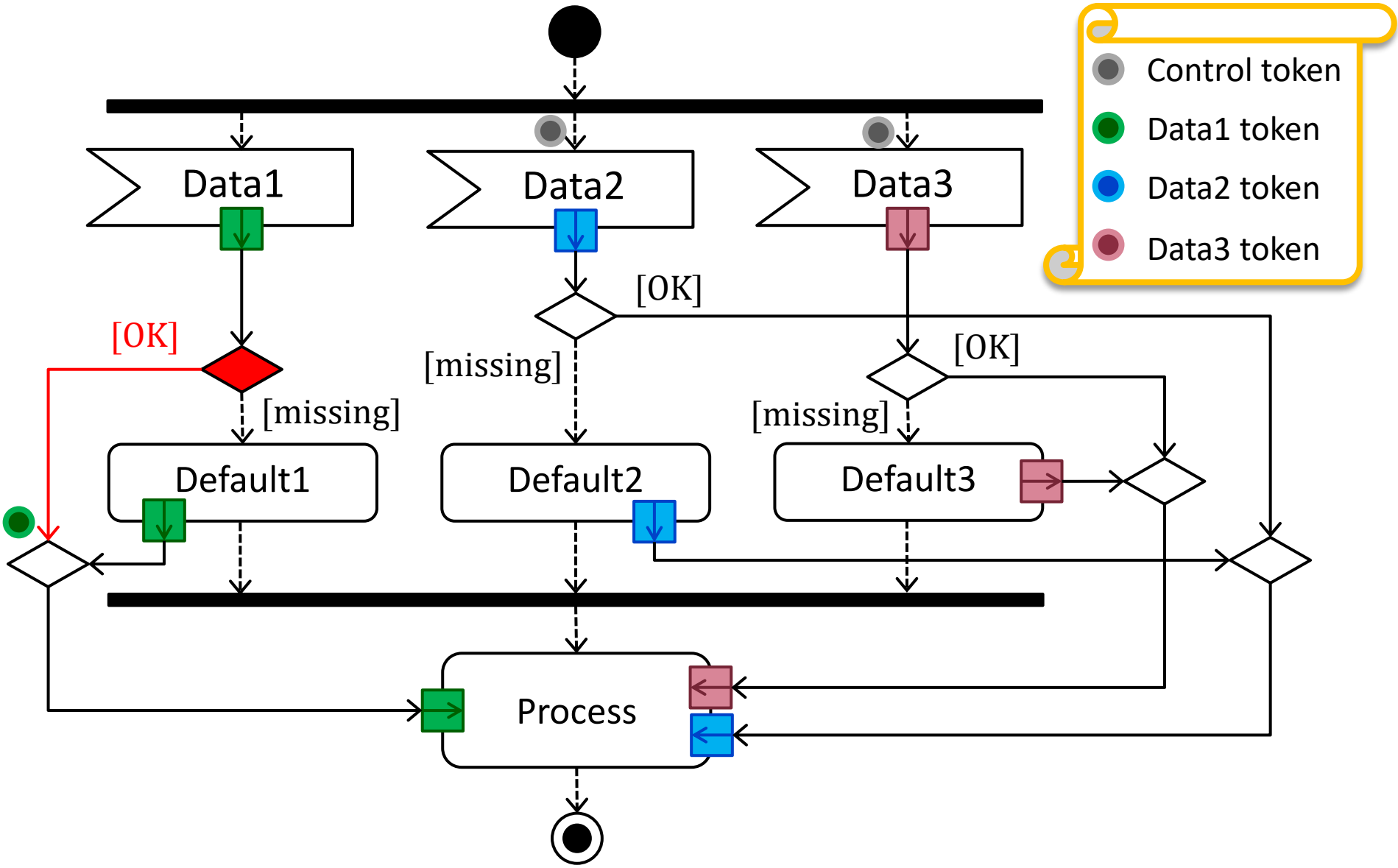

Example: Process collected data

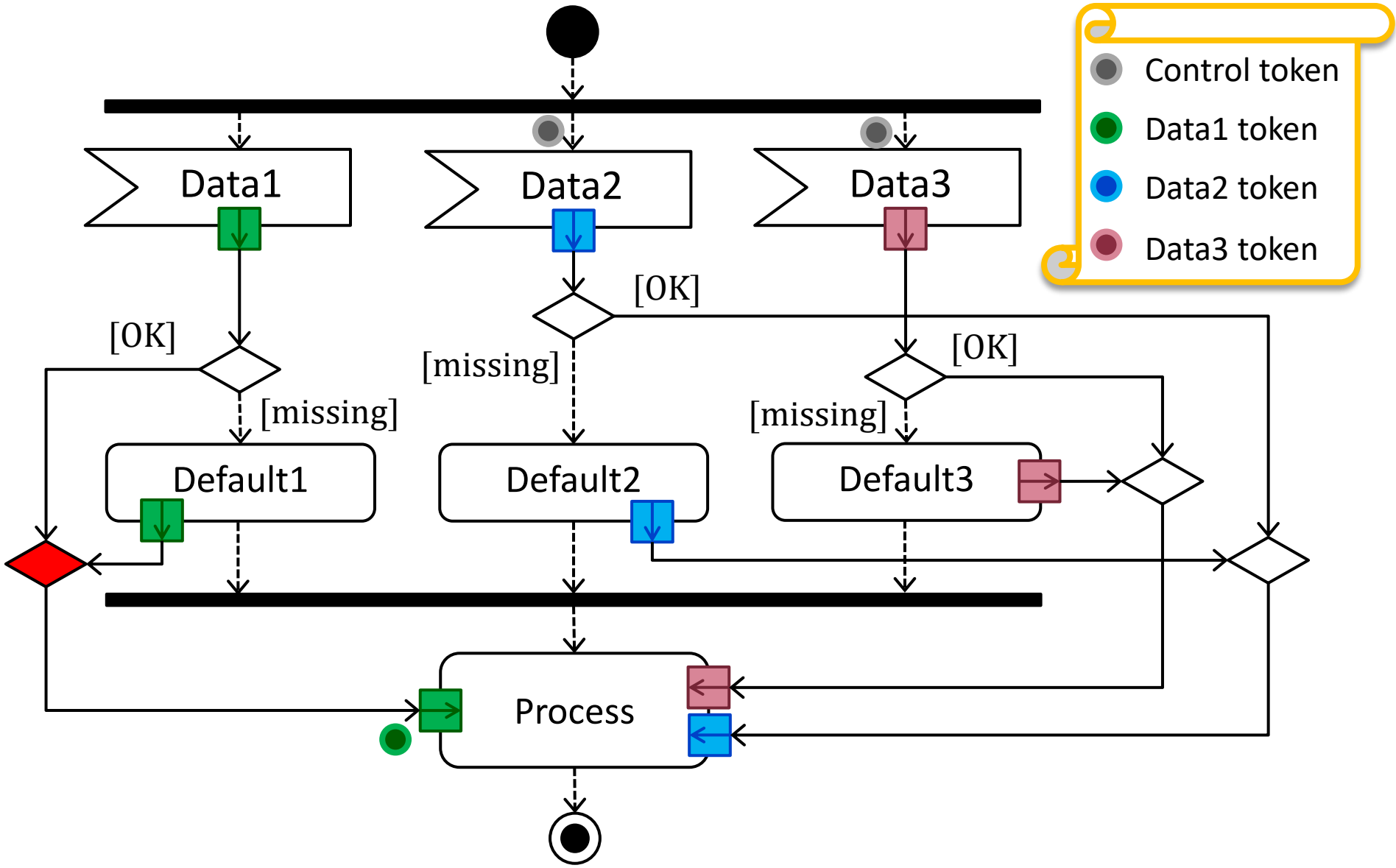

Example: Process collected data

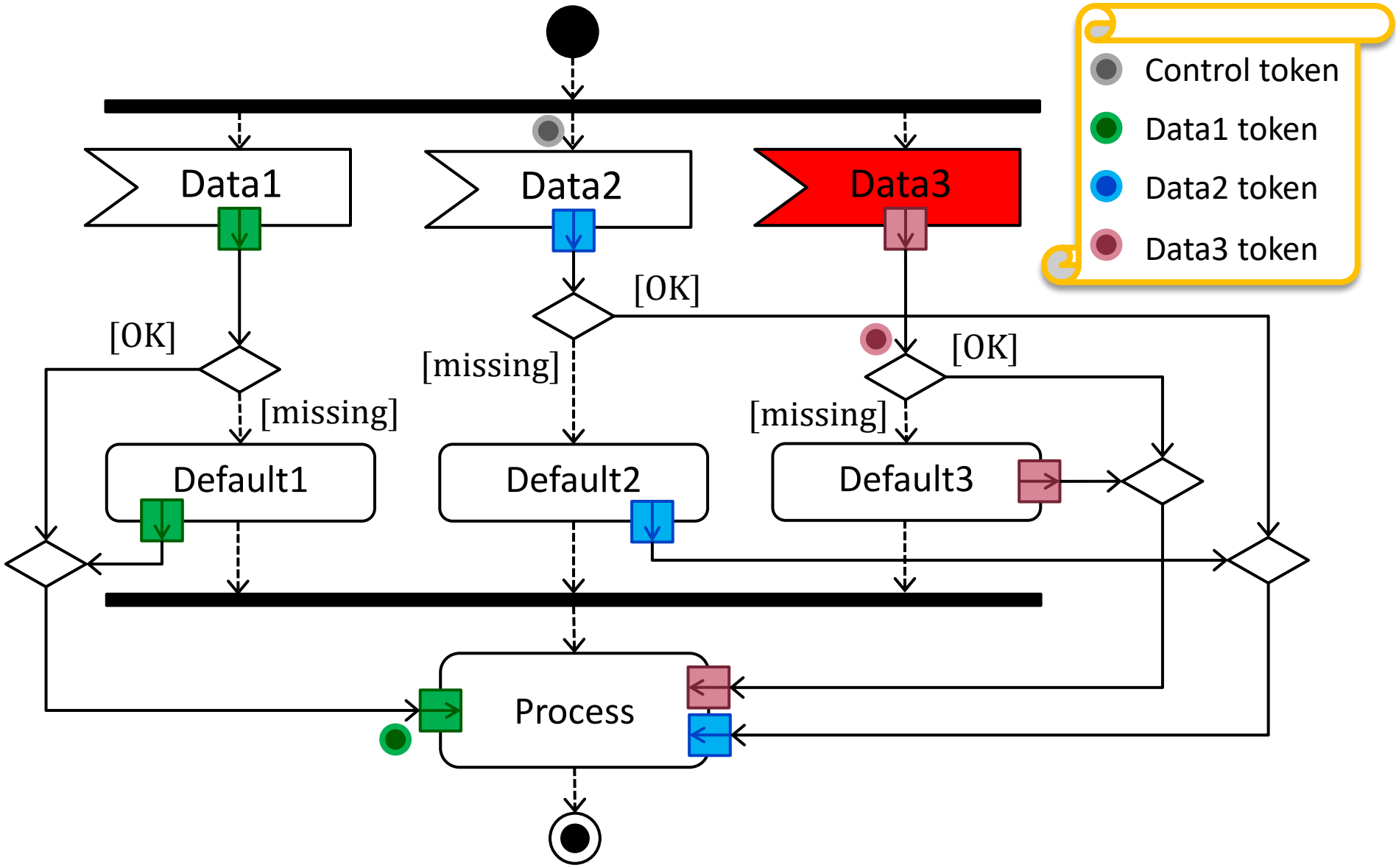

Example: Process collected data

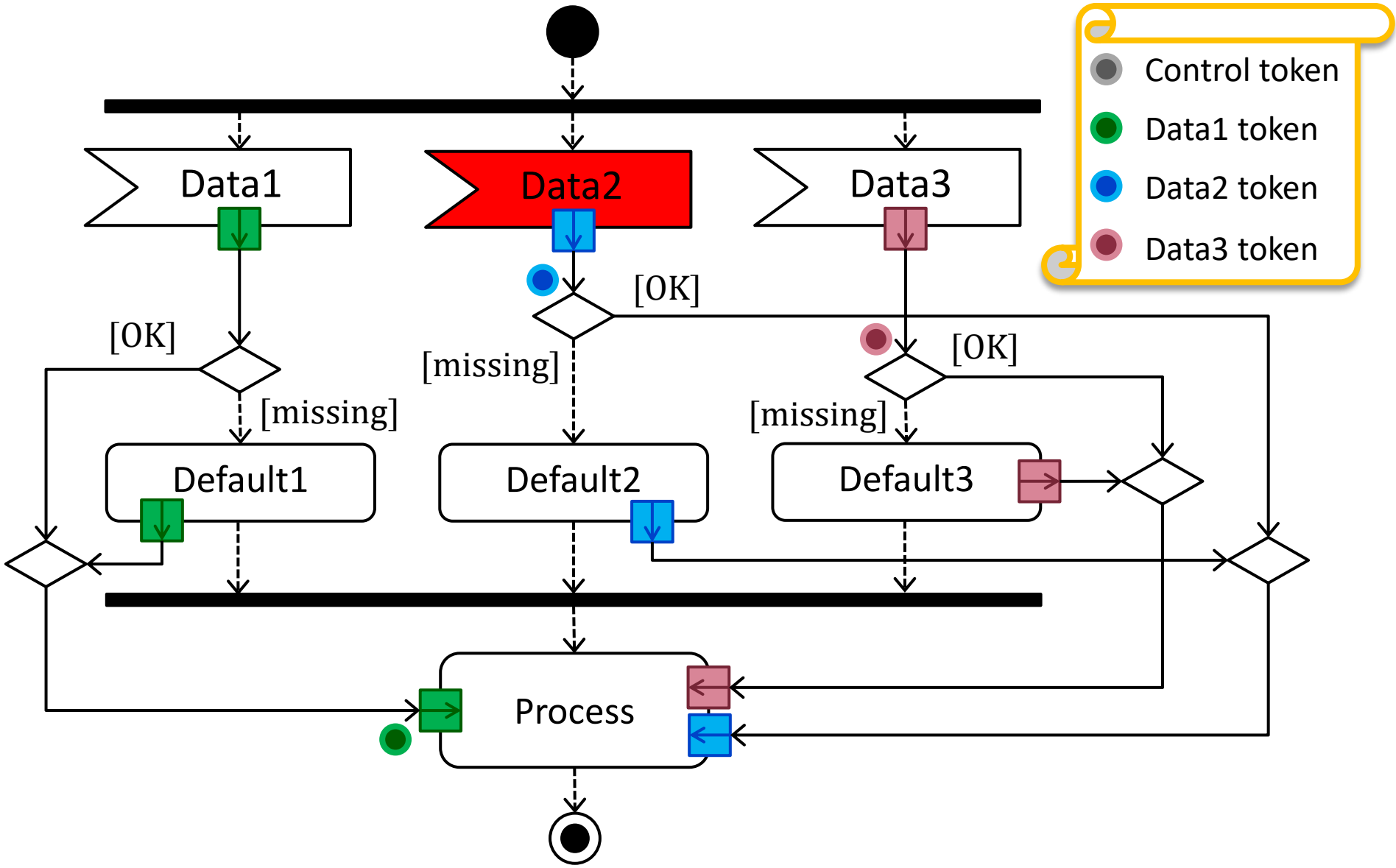

Example: Process collected data

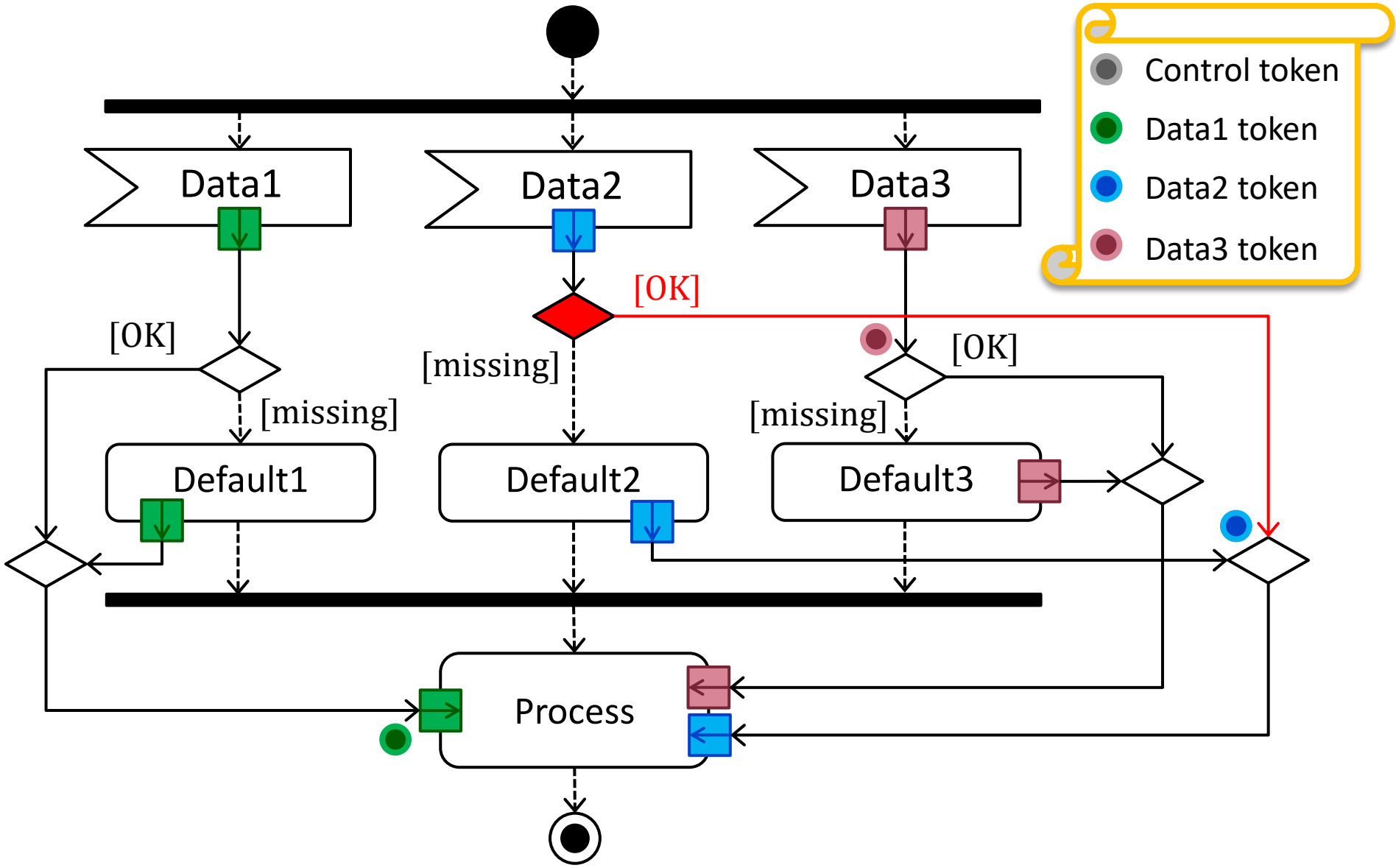

Example: Process collected data

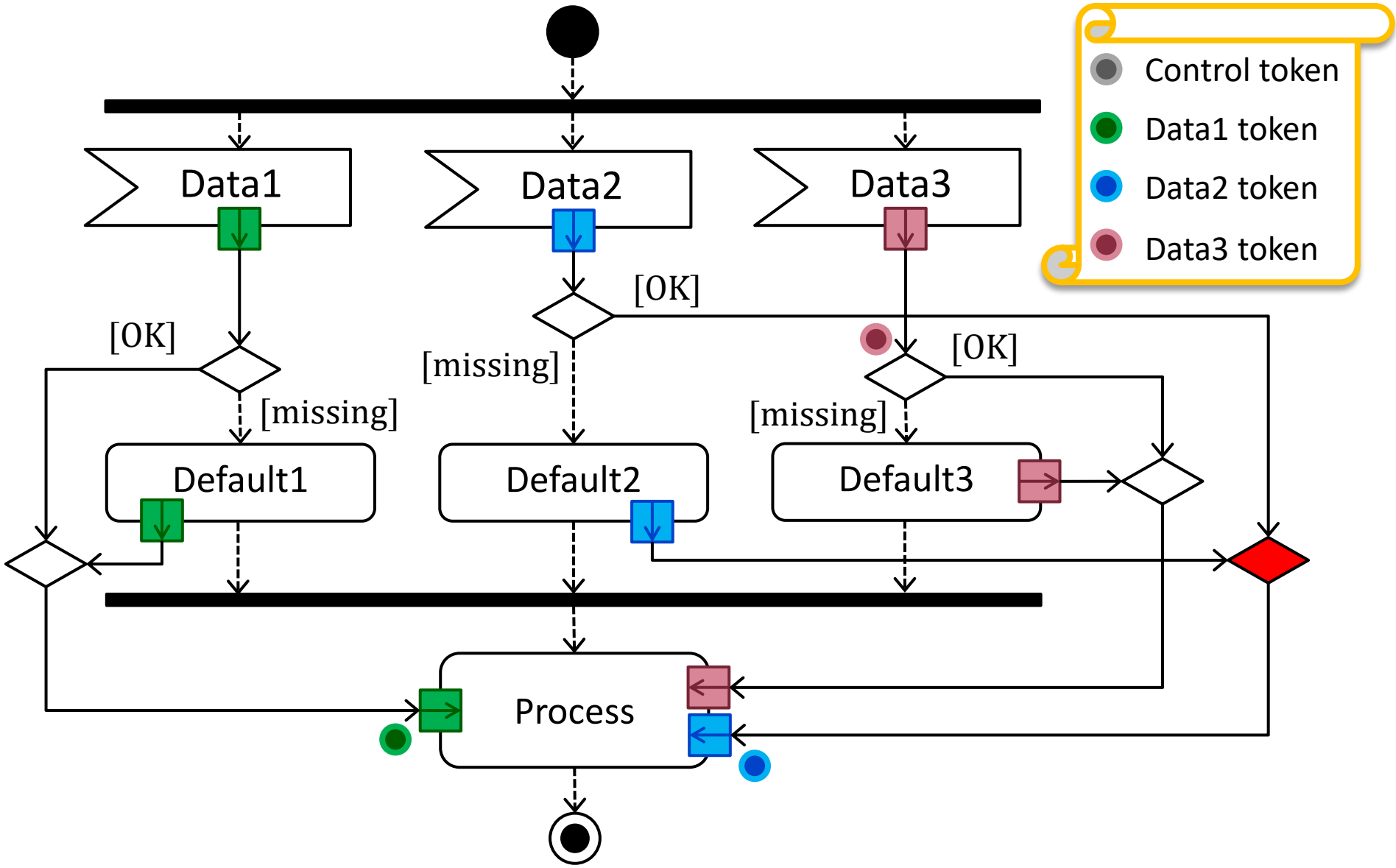

Example: Process collected data

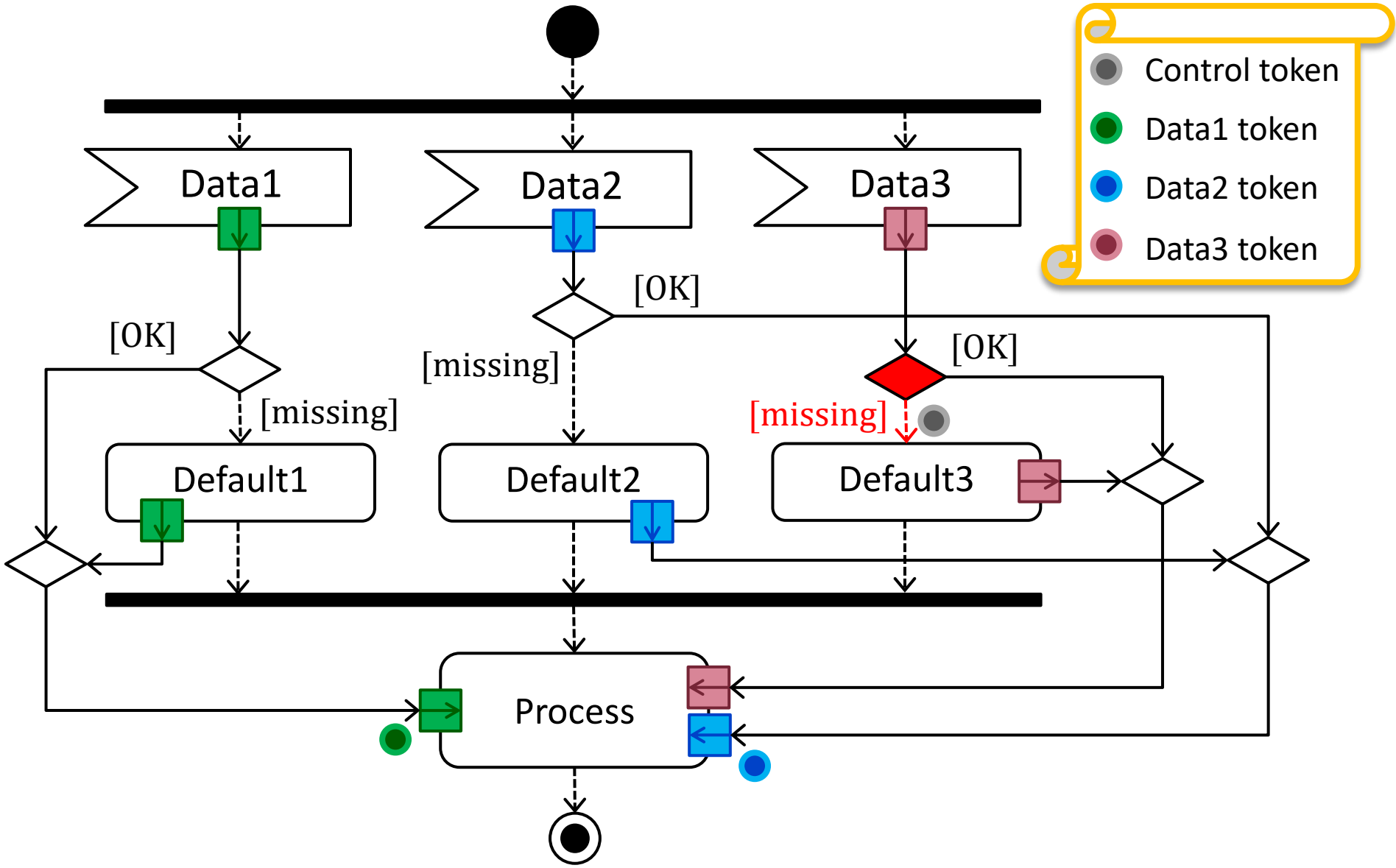

Example: Process collected data

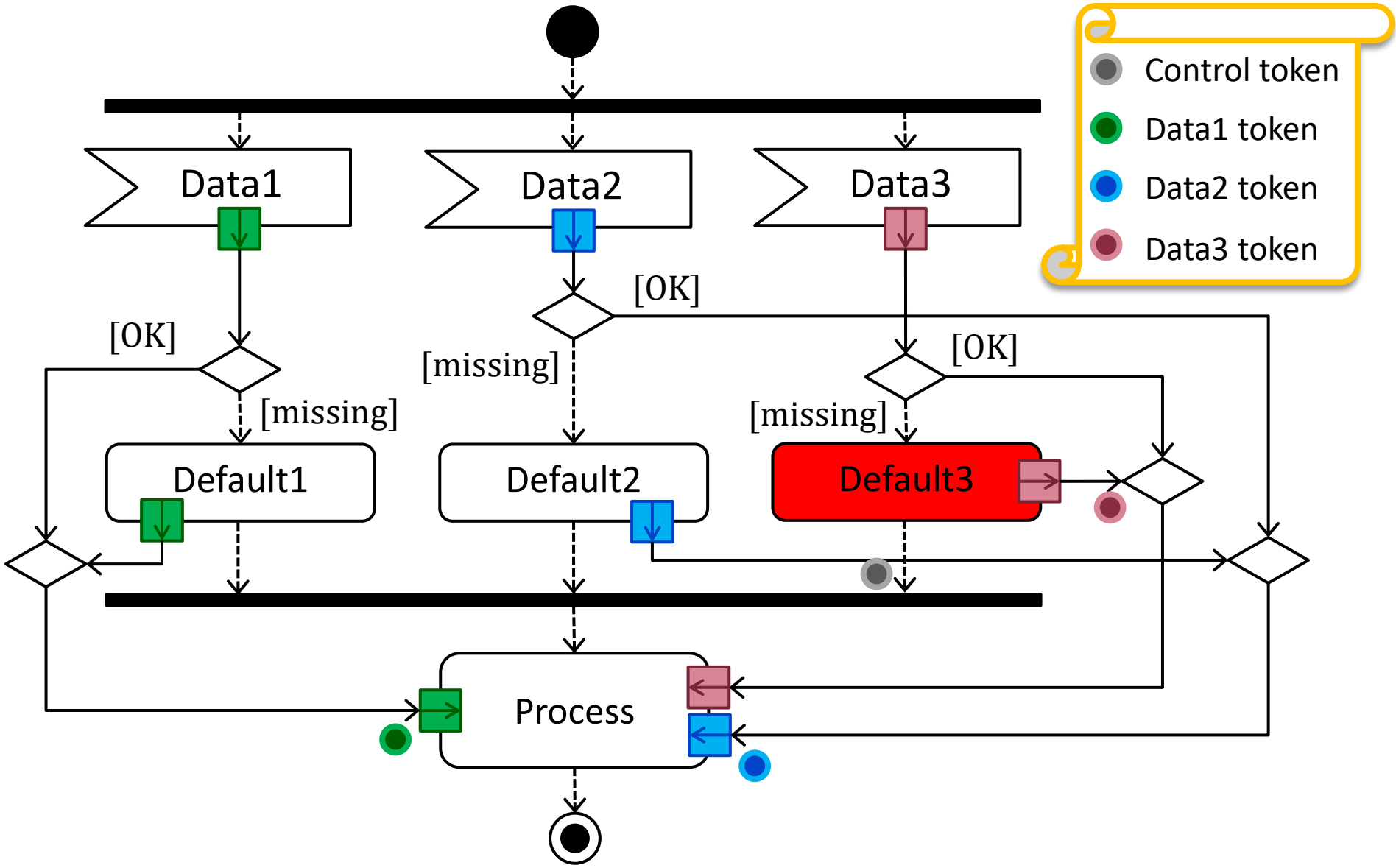

Example: Process collected data

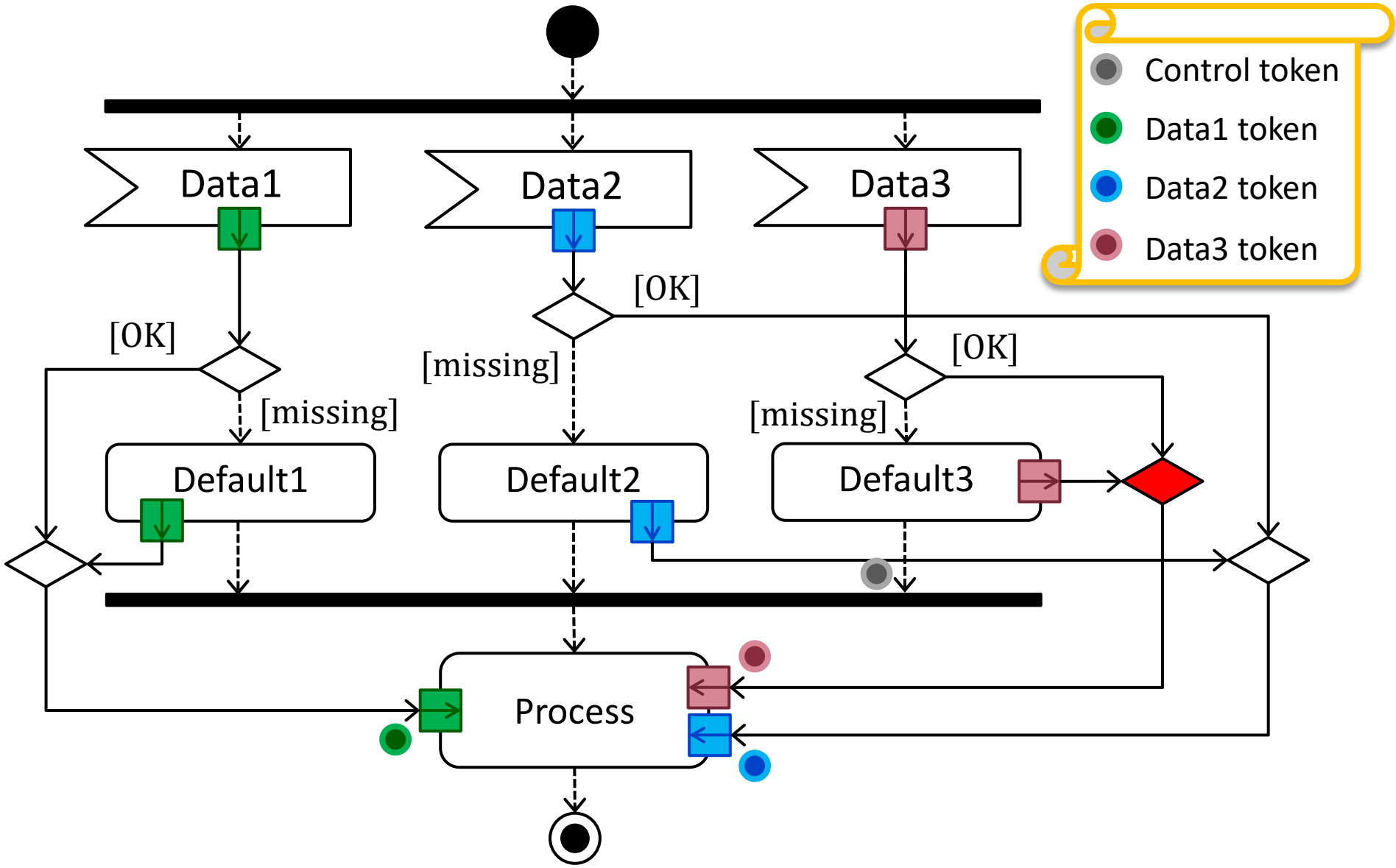

Example: Process collected data

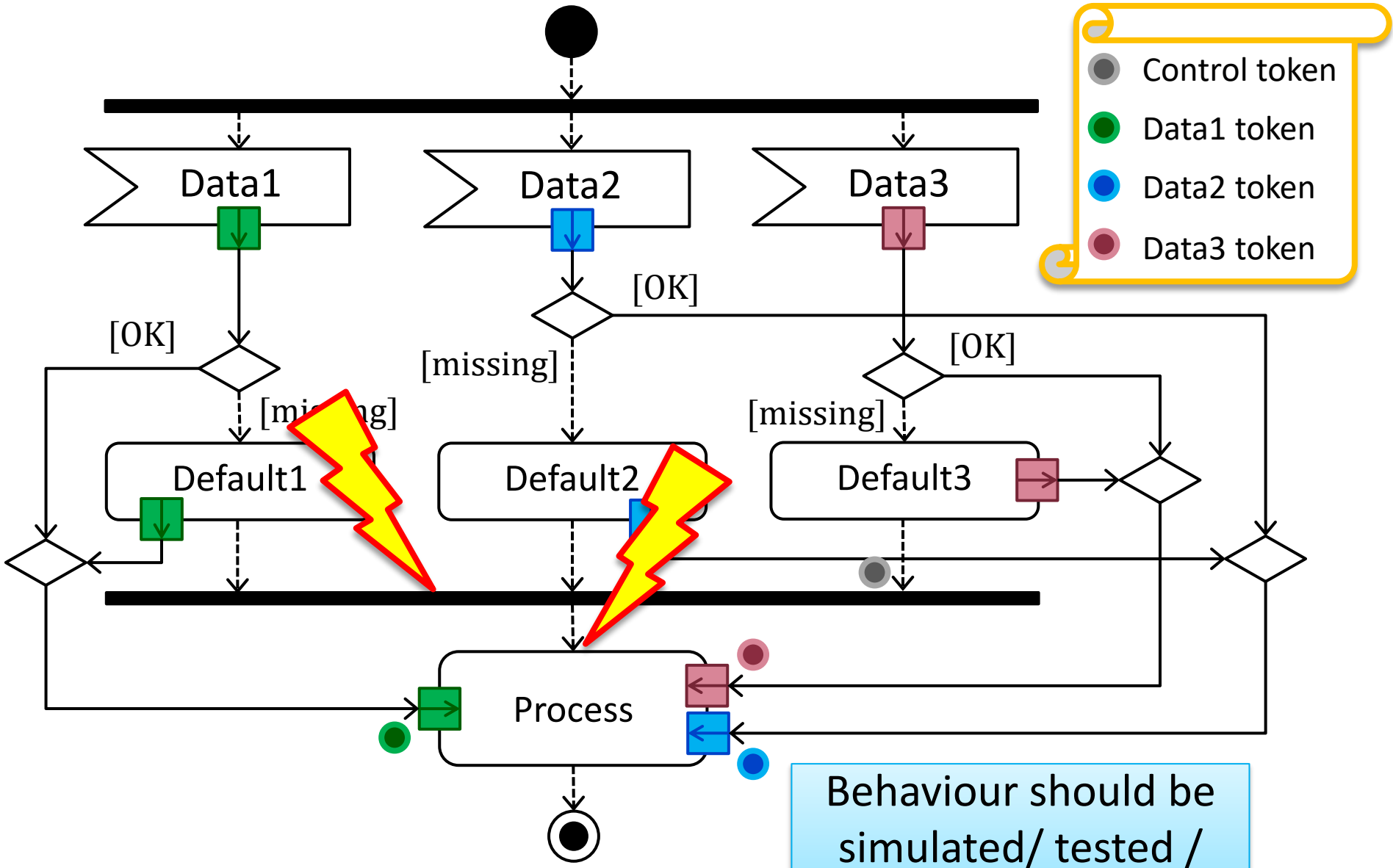

Behaviour should be simulated/ tested / formally verified

MODELING WITH UML ACTIVITY DIAGRAMS

Modeling high-level processes

Modeling low-level activities

Deadlock, Ambiguity & Completeness

Best practices

Modeling high-level processes

Describe **system-level processes**

- As a refinement for Use Case Diagrams
  - **Use case flows:**
    - Action = Use Case
    - *"In what order can use cases be executed?"*
    - Typical and exceptional scenarios
  - **Use case scenarios:**
    - Actions are informal steps
    - *"What happens when a Use Case is executed?"*
    - Actions may later be refined into Activities
      - …and allocated to functional blocks

Modeling low-level activities

Describe low-level behavior to be implemented

- As a refinement of **operations**
  - Can describe the control and data flow of the method
  - With fUML: **executable models**
- As the behavior to execute in **state-based models**
  - Reactions to an event/signal
  - Continuous behavior in a certain state
- As an alternative to **Interaction Diagrams**
  - Specify communication **and** internal behavior
  - Relying on Allocation Partitions

Deadlock, Ambiguity & Completeness

- **Deadlock-freeness:**
  - Control must always reach a Final node
  - Often due to incorrect use of control structures
    - Can be avoided by well-structuredness (see System Modeling)
- **Unambiguity:**
  - There shall never be more than one condition that evaluates to true at the same decision

    $\rightarrow$ Non-deterministic behavior
- **Completeness:**
  - There shall always be at least one condition that evaluates to true at the same decision

    $\rightarrow$ Deadlock

Best practices

- How to **build** a model?
  1. Model the **typical (primary) control flow** first
  2. Add **alternate** and **exceptional** paths
  3. Identify and model **data** and **data flows**
  4. Decompose the initial model by **refining Actions**
  5. **Allocate** Actions to functional blocks
- How to build a **good** model?
  - Always add a Final node to indicate the end of activity
    - Add multiple ones to indicate different or abnormal outcomes
  - Avoid ambiguity and incompleteness
  - Strive to build a **well-structured** model

RELATIONS TO OTHER DIAGRAMS

Class/Block Diagram

Activity Diagram

Interactions

Use case diagram, Block diagram

Use Case Diagram

- Refines use cases
  - Use case flow
  - Use case scenario

Block Diagram

- Allocates activities to blocks
- Defines main (continuous) behavior of blocks
- Defines behavior of operations
- Defines usage of data in a process

Interactions, State Machines

Interactions

- Refines/Extends Interactions
  - Modeling of communication and internal behavior

State Machines

- Defines behavior of actions in State Machines
  - How to react to an event
  - What to do in a state